SUMMARY OF SURVEY CONTROL

POINT NUMBER	NORTHING	EASTING	ELEVATION	LOCATION
CWA #1	3634700.76	11044307.11	1016.07	IN GRASS
CWA #3	3634809.00	11044463.56	1016.63	IN PAVEMENT

NOTES:

1. SEE SHEET 5 OF 5 FOR TEMPORARY COFFERDAM DETAIL AND NOTES. THE WIDTH OF PETERS CREEK AT THIS LOCATION IS APPROXIMATELY 15 FEET.
2. FILTER BAGS SHALL BE USED DURING DEWATERING ACTIVITIES. THEY SHALL BE CONSTRUCTED OF NON-WOVEN GEOTEXTILE MATERIAL THAT WILL PROVIDED ADEQUATE FILTERING ABILITY TO CAPTURE THE LARGER SOIL PARTICLES FROM THE PUMPED WATER.
3. FILTER BAGS SHALL BE USED IN COMBINATION WITH A STRAW BALE/SILT FENCE PIT WHEN LOCATED WITHIN 50 FEET OF THE STREAM. IF THE DISTANCE TO THE STREAM IS GREATER THAT 50 FEET, THE BAGS SHALL BE PLACED ON WELL-ESTABLISHED GRASS, OR ON AN AGGREGATE PAD CONSTRUCTED OF VDOT # 57 STONE AT A MINIMUM DEPTH OF 6 INCHES. THE BAGS SHALL NEVER BE PLACED ON BARE SOIL.
4. INLET PROTECTION SHALL BE INSTALLED ON EXISTING CURB INLET, IF NECESSARY. THIS REQUIREMENT WILL BE DETERMINED BY THE PROJECT INSPECTOR.
5. RR SIGNIFIES VDOT CLASS II RIPRAP.
6. WORK OCCURRING WITHIN THE CITY'S RIGHT-OF-WAY IS TO BE PERFORMED PER THE CITY OF ROANOKE RIGHT OF WAY EXCAVATION AND RESTORATION STANDARDS.
7. CONTRACTOR SHALL SUBMIT A SHORING PLAN FOR THE 30" SANITARY SEWER INTERCEPTOR BETWEEN STATION 10+00 AND STATION 10+60, SEALED BY A PROFESSIONAL ENGINEER WITH EXPERIENCE IN SHORING DESIGN. SHORING PLAN MUST TAKE INTO ACCOUNT THAT ROCK FORMATION IS SHALLOW AND NOT LEVEL.
8. CONTRACTOR SHALL SUBMIT A TRAFFIC CONTROL PLAN TO THE CITY TRAFFIC ENGINEER (TRANSPORTATION DEPARTMENT: 540-853-2385) FOR APPROVAL BEFORE THE START OF CONSTRUCTION ACTIVITIES.

TOP FACE OF RETAINING WALL COORDINATES

STATION	NORTHING	EASTING
10+00	3634966.49	11044364.88
10+20	3634946.64	11044362.41
10+40	3634926.79	11044359.94
10+60	3634906.95	11044357.48
10+80	3634887.13	11044360.12
11+00	3634867.31	11044362.80
11+20	3634847.49	11044365.48

RETAINING WALL BASE (FOOTING)

STATION	LENGTH OF BASE (FT)
10+00 – 10+28.9	7.0
10+28.9 – 10+92.7	7.5
10+92.7 – 11+20	7.0

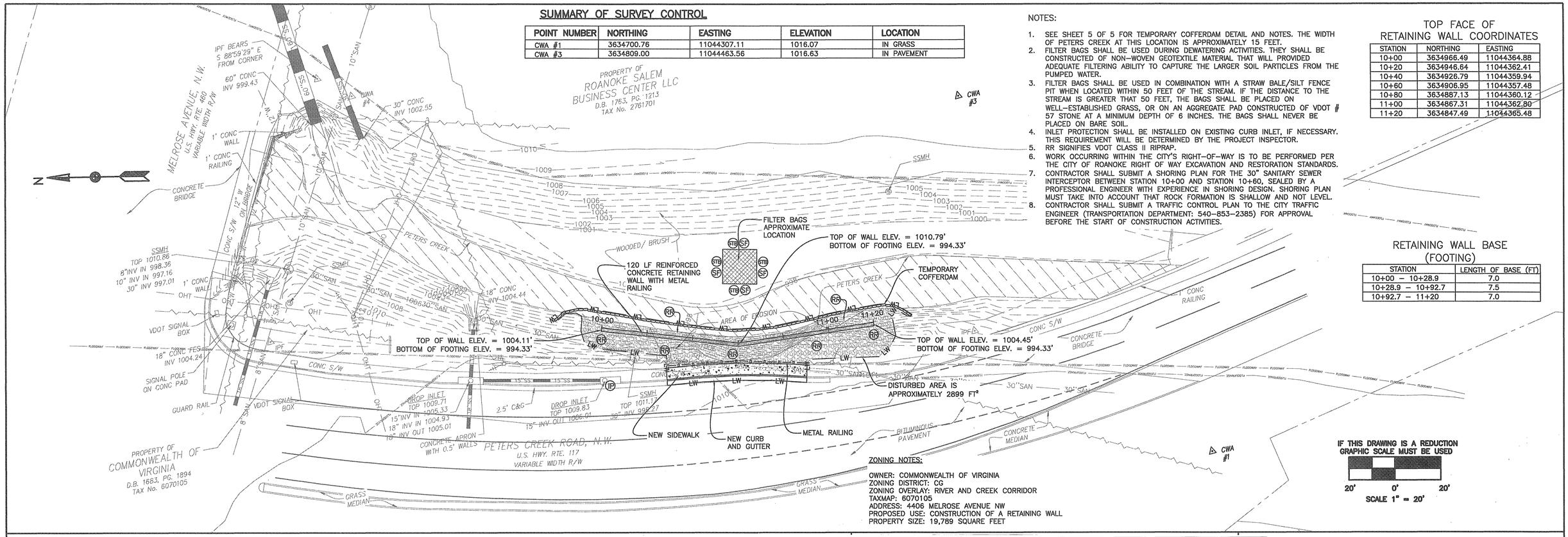

ZONING NOTES:

OWNER: COMMONWEALTH OF VIRGINIA
ZONING DISTRICT: CG
ZONING OVERLAY: RIVER AND CREEK CORRIDOR
TAXMAP: 6070105
ADDRESS: 4406 MELROSE AVENUE NW
PROPOSED USE: CONSTRUCTION OF A RETAINING WALL
PROPERTY SIZE: 19,789 SQUARE FEET

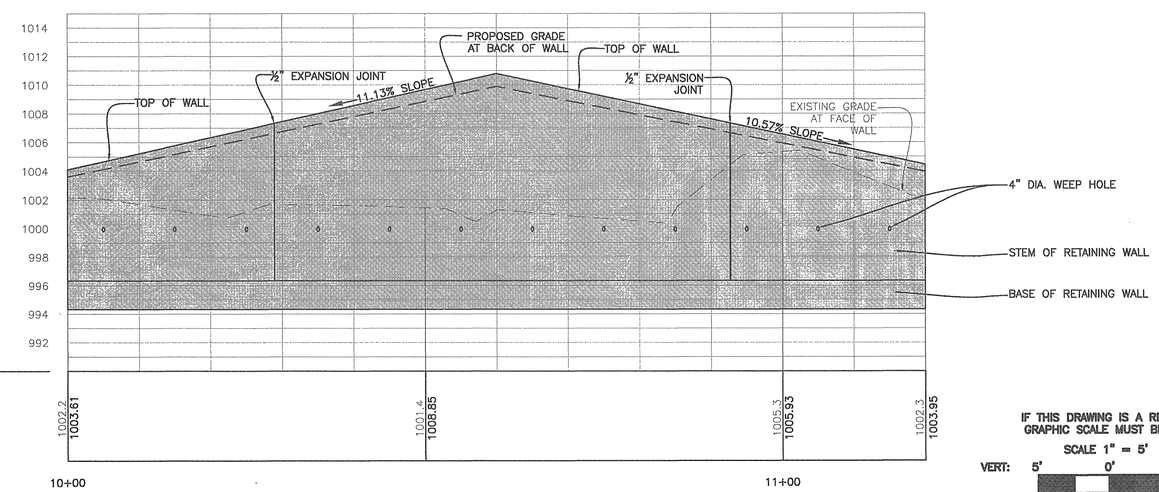

IF THIS DRAWING IS A REDUCTION GRAPHIC SCALE MUST BE USED
SCALE 1" = 5'
VERT: 5' 0' 5'
HORZ: 10' 0' 10'
SCALE 1" = 10'

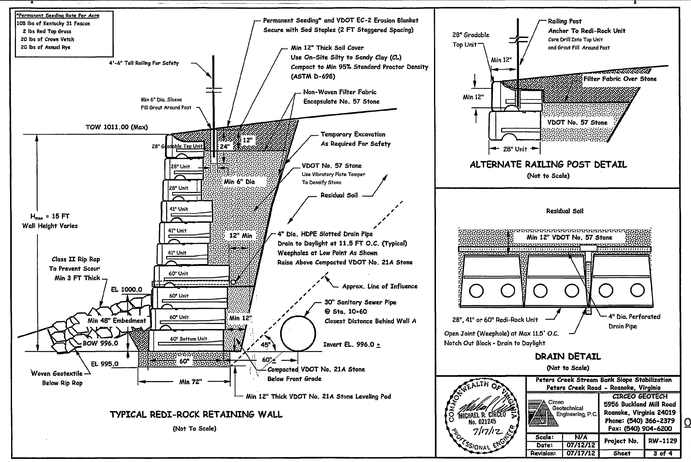

NTS

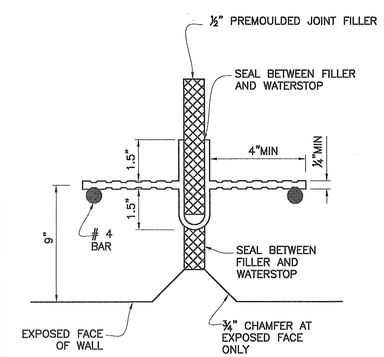

NOTE:
HOLES WILL BE PERMITTED IN THE OUTER ½" OF THE WEB FOR WIRES, RINGS, ETC. TIE WEBS TO #3 REINFORCEMENT BARS AT 12" MAXIMUM INTERVALS TO SUPPORT THE WATERSTOP IN PROPER POSITION DURING CONCRETE PLACEMENT.
WATERSTOP SHALL BE MANUFACTURED FROM NEOPRENE OR POLYVINYL CHLORIDE.
WATERSTOP SHALL HAVE 5 OR MORE PAIRS OF RAISED RIBS TO PROVIDE 0.1 SQUARE INCH RIB CROSS-SECTION AREA ON EACH HALF OF THE WATERSTOP. HEIGHT OF RIBS TO BE 3/32" MINIMUM.
WATERSTOP SHALL EXTEND 4" BELOW TOP OF WALL TO TOP OF FOOTING/BASE

WATERSTOP DETAIL
NTS

APPROVED
MAR 08 2012

OFFICE OF THE CITY ENGINEER
215 CHURCH AVENUE, S.W.
ROOM 350
PHONE: (540) 853-2731
FAX: (540) 853-1364
WWW.ROANOKEVA.GOV

DESIGNED: JJK
DRAWN: JJK
CHECKED: LEP

COMMONWEALTH OF VIRGINIA
JOSEPHUS M. JOHNSON-KOROMA
Lic. No. 46165
3/8/2012
PROFESSIONAL ENGINEER

REV.	DATE:	DESCRIPTION

DATE: 12/19/11
SCALE: AS SHOWN

PETERS CREEK STREAM BANK SLOPE STABILIZATION
PLAN AND PROFILE
CITY OF ROANOKE, VIRGINIA

SHEET 3 OF 5
PLAN NO. 6703