1. MATERIALS AND FABRICATION IN ACCORDANCE WITH ASTM C478-09.
2. WHEN USED AS SAMPLING MANHOLE FLOW SHALL PASS STRAIGHT THROUGH, i.e., 180°.
3. STEPS SHALL BE VERTICALLY ALIGNED. FIRST STEP SHALL BE WITHIN 12" OF COVER, BOTTOM STEP SHALL BE WITHIN 24" OF BOTTOM OF MANHOLE.
4. FRAME AND COVER SHALL BE PROPERLY ALIGNED WITH THE 2 FOOT OPENING OF THE MANHOLE STRUCTURE AND BOLTED IN PLACE.
5. FLAT TOP MANHOLES MAY ONLY BE SUBSTITUTED WITH THE PERMISSION OF THE PARTICIPATING UTILITY.
6. FLEXIBLE JOINT MANHOLE CONNECTION SHALL BE AS MANUFACTURED BY PRES-SEAL GASKET CORPORATION OR EQUAL.
7. GROUT ANNULAR SPACE BETWEEN PIPE AND PRECAST MANHOLE ON INSIDE OF MANHOLE.
8. WHEN REPLACING AN EXISTING MANHOLE OR INSTALLING A NEW PRECAST MANHOLE ON AN EXISTING SEWER, A MINIMUM OF SIX FEET (6') OF EXISTING PIPE SHALL BE REMOVED AND REPLACED WITH NEW MATERIAL ON INLET AND OUTLET OF MANHOLE.
9. MANHOLES WHERE THE INVERT IS LOWER THAN THE NORMAL GROUNDWATER ELEVATION (I.E., ALONG CREEKS, RIVERS, LOW-LYING AREAS, ETC.) SHALL HAVE A FULL EXTERIOR COATING AND JOINT WRAP APPLIED IN ADDITION TO JOINT SEALANT. SEE NOTES 10 & 11.
10. IF REQUIRED EXTERIOR VERTICAL WALL SURFACES SHALL BE FACTORY COATED IN ACCORDANCE WITH THE MANUFACTURERS RECOMMENDATION. COATING SHALL BE HIGH BUILD COAL TAR EPOXY MEETING ASTM D1227. COATING SHALL BE APPLIED IN TWO COATS TO A MINIMUM TOTAL THICKNESS OF 16 MILS.
11. IF REQUIRED ALL MANHOLES SHALL UTILIZE AN EXTERNAL FRAME AND JOINT SEAL AT ALL JOINTS AND AT THE FRAME/CHIMNEY/INTERFACE. SEAL SHALL BE MADE OF EPDM RUBBER INACCORDANCE WITH ASTM D412 OR POLYOLEFIN BACKED EXTERIOR JOINT WRAP IN ACCORDANCE WITH ASTM E-1745, C-877, AND C-990. EDM SEAL SHALL HAVE A MINIMUM THICKNESS OF 60 MILS. POLYOLEFIN BACKED EXTERIOR JOINT WRAP SHALL HAVE A BACKING BAND ELEMENT WITH MINIMUM THICKNESS OF 4 MILS. AND BUTYL ROLLER ADHESIVE WITH MINIMUM THICKNESS OF 60 MILS. SEAL SHALL AGGRESSIVELY BOND TO CONCRETE AND METAL STRUCTURES.
12. FOR PIPE LARGER THAN 15 INCHES IN DIAMETER, THE MINIMUM INSIDE DIAMETER OF THE MANHOLE SHALL BE IN ACCORDANCE WITH MANUFACTURERS RECOMMENDATIONS BASED ON PIPE SIZE AND ANGLE BETWEEN INLET AND OUTLET PIPING.
13. 6' MINIMUM DIAMETER MANHOLE SHALL BE REQUIRED WHEN DEPTHS EXCEED 15' UNLESS OTHERWISE APPROVED BY PARTICIPATING UTILITY.

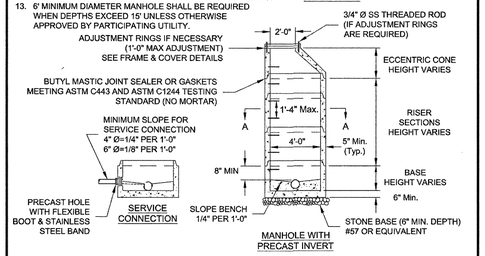

WESTERN VIRGINIA REGIONAL - CONSTRUCTION DETAIL

4' STANDARD MANHOLE FOR PIPE 15" OR SMALLER (FOR DEPTHS UP TO 15 FEET) — 08/01/15 — **S-1**

1. STRADDLE MANHOLE NOT ACCEPTABLE UNLESS APPROVED BY PARTICIPATING UTILITY.
2. MATERIALS AND FABRICATION IN ACCORDANCE WITH ASTM C478-09, AND ASTM C1619.
3. SEE DETAIL S-1 FOR ADDITIONAL MANHOLE REQUIREMENTS.
4. WATERSTOP TO BE GREENSTREAK HYDROTITE OR LEAKMASTER LV-1. WATERSTOP MUST BE ALLOWED TO FULLY CURE BEFORE CONTACT WITH WET CONCRETE IS ALLOWED.
5. FIRST POUR: TOP SURFACE OF FIRST POUR SHALL CREATE A SMOOTH, FLAT, LEVEL BEARING SURFACE TO FACILITATE A WATERTIGHT SEAL BETWEEN POURED BASE AND PRECAST MANHOLE SECTION. CONCRETE SHALL BE 3,000 PSI CONCRETE AND MUST CURE 7-DAYS BEFORE SETTING MANHOLE SECTION.
6. SECOND POUR: MANHOLE SHALL BE COMPLETELY SET INCLUDING FRAME AND COVER BEFORE PLACING SECOND POUR. CONCRETE BONDING AGENT SHALL BE APPLIED TO ALL SURFACES/COLD JOINTS WHERE NEW CONCRETE IS TO BE POURED AGAINST EXISTING. CONCRETE SHALL BE 3,000 PSI AND SHALL BE ALLOWED TO CURE FOR 3-DAYS PRIOR TO PLACING BACKFILL.

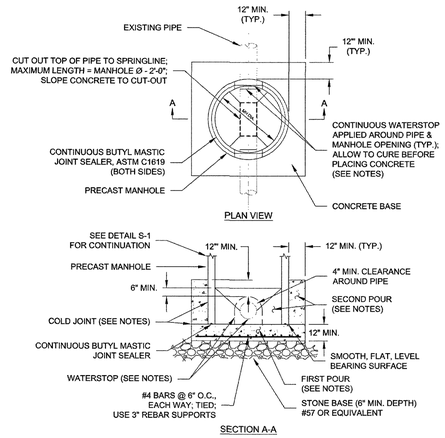

WESTERN VIRGINIA REGIONAL - CONSTRUCTION DETAIL

STRADDLE MANHOLE — 01/01/14 — **S-2**

1. MATERIALS AND FABRICATION IN ACCORDANCE WITH ASTM C478-09.
2. STEPS SHALL BE VERTICALLY ALIGNED. FIRST STEP SHALL BE WITHIN 12" OF COVER, BOTTOM STEP SHALL BE WITHIN 24" OF BOTTOM OF MANHOLE.
3. THE FRAME AND COVER SHALL BE PROPERLY ALIGNED WITH THE 2 FOOT OPENING OF THE MANHOLE STRUCTURE AND BOLTED IN PLACE.
4. RELINER BY DURAN INSIDE DROP BOWLS AND PIPE BRACKETS WILL BE ALLOWED.
5. GROUT ANNULAR SPACE BETWEEN PIPE AND PRECAST MANHOLE ON INSIDE OF MANHOLE.
6. STEPS SHALL BE A MINIMUM OF 90 DEGREES FROM DROP & ALIGNED VERTICALLY.
7. INSIDE DROP ONLY ALLOWED WHEN DEPTH EXCEEDS 12' AND APPROVED BY PARTICIPATING UTILITY.
8. 6" MINIMUM DIAMETER MANHOLE REQUIRED FOR TWO OR MORE INSIDE DROP CONNECTIONS (MAIN LINE OR LATERAL).
9. SEE FRAME AND COVER DETAIL.
10. SEE DETAIL S-01 FOR EXTERIOR COATING AND JOINT SEAL REQUIREMENTS.

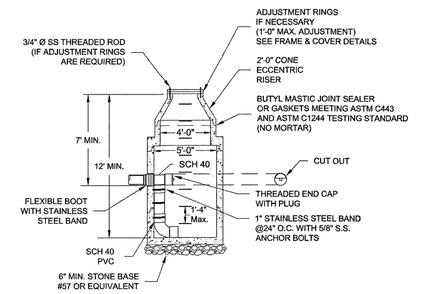

WESTERN VIRGINIA REGIONAL - CONSTRUCTION DETAIL

INSIDE DROP MANHOLE — 01/01/14 — **S-3**

1. TRAFFIC BEARING BOX AND LID REQUIRED IN TRAFFIC AREAS (CAPITOL FOUNDRY VB-9*S).
2. SEWER LATERAL AND CLEANOUT PIPING SHALL BE ASTM D3034 SDR 26. SEWER LATERAL FITTINGS SHALL BE OF SAME SDR RATING AS THE SEWER MAIN. SCHEDULE 40 SOLVENT WELD PIPE AND FITTINGS MAY BE USED FOR THE SEWER LATERAL AND CLEANOUT ASSEMBLY WITH APPROVAL FROM THE PARTICIPATING UTILITY.
3. ALL PIPE SHALL BE OF SAME SIZE.
4. NO BENDS ARE ALLOWED IN THE LATERAL FROM THE MAIN TO THE CLEANOUT STACK WYE. (EXCEPT FOR DEEP SEWER, AS SHOWN BELOW).
5. ALL MAIN LINE TAPS ON ACTIVE MAINS SHALL BE PERFORMED BY PARTICIPATING UTILITY.
6. PIPING ON PRIVATE SIDE OF CLEANOUT TO BE INSTALLED PER GOVERNING JURISDICTION REQUIREMENTS.
7. MINIMUM LATERAL SIZE: 4" FOR RESIDENTIAL SERVICE, 6" FOR NON-RESIDENTIAL SERVICE.
8. SEWER CLEANOUTS SHALL BE SAME SIZE AS SEWER LATERAL.
9. MINIMUM COVER FOR ALL SEWER LATERALS SHALL BE THREE (3') FEET.
10. PROPERTY OWNER RESPONSIBLE FOR INSTALLING CLEANOUT ON PROPERTY LINE (IN ACCORDANCE WITH THIS DETAIL) WHEN MAINTENANCE OCCURS.
11. LOWEST SERVED FINISHED FLOOR ELEVATION SHALL BE A MINIMUM OF THREE FEET (3') ABOVE THE TOP OF THE MAIN AT THE POINT WHERE THE SERVICE LATERAL CONNECTS TO THE MAIN.
12. WHEN CONNECTING TO EXISTING LATERAL USE FERNCO FLEXIBLE COUPLING.

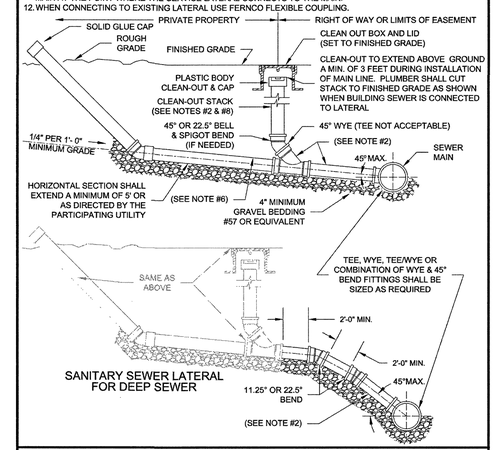

WESTERN VIRGINIA REGIONAL - CONSTRUCTION DETAIL

SANITARY SEWER LATERAL — 01/01/14 — **S-6**

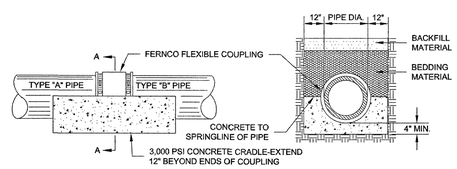

WESTERN VIRGINIA REGIONAL - CONSTRUCTION DETAIL

JOINING DISSIMILAR PIPE FOR USE WITH EXISTING PIPE — 01/01/14 — **S-11**

1. FOR PIPES 18" AND LARGER PROVIDE A MASONRY BULKHEAD IN LIEU OF MECHANICAL PLUGS.

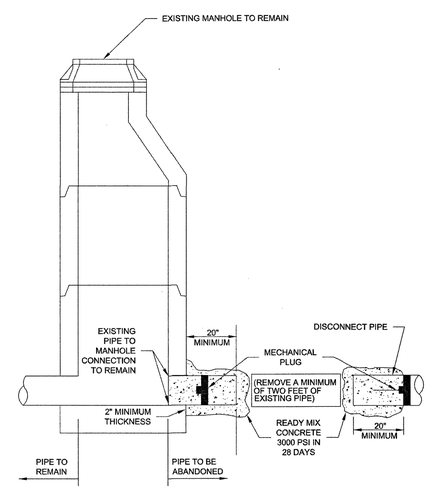

WESTERN VIRGINIA REGIONAL - CONSTRUCTION DETAIL

SANITARY SEWER PIPE ABANDONMENT AT A MANHOLE — 01/01/14 — **S-15**

COMMONWEALTH OF VIRGINIA
GARY WAYNE FERN
Lic. No. 048914
PROFESSIONAL ENGINEER

Whitman Requardt & Associates
Blacksburg, Virginia
UTILITY ENGINEER

Rev	Date	Description

Whitman, Requardt & Associates, LLP
1700 Kraft Drive, Suite 1200, Blacksburg, Virginia 24060

COUNTY OF ROANOKE
5204 BERNARD DRIVE
ROANOKE, VA 24018

VDOT PROJECT NUMBERS:
0115-080-R95, P101, C501 &
EN12-080-823, P101, R201, C501

VDOT UPC NUMBERS: 98220 & 103607

PLANTATION ROAD, BICYCLE, PEDESTRIAN, AND STREETSCAPE IMPROVEMENTS PROJECT

Drawing
DETAIL DRAWING
WVWA - SEWER

Sheet
10(2B)