THIS IS AN ORIGINAL SIZE PLAT AND HAS NOT BEEN REDUCED.

GENERAL NOTES:

1. THIS PLAT WAS PREPARED WITH BENEFIT OF A TITLE REPORT COMMITMENT NO. SS99091649 OF SOUTHERN TITLE INSURANCE CORPORATION AND IS SUBJECT THERETO. THERE MAY EXIST ENCUMBRANCES WHICH AFFECT THE PROPERTY NOT SHOWN HEREON.
2. THE SUBJECT PROPERTY IS WITHIN THE LIMITS OF ZONE "X" AS SHOWN ON THE FEMA FLOOD INSURANCE RATE MAP NO. 51161C0046 D, EFFECTIVE DATE OCT. 15, 1993. THIS DETERMINATION IS BASED ON SAID MAP AND HAS NOT BEEN VERIFIED BY ACTUAL FIELD ELEVATIONS.
3. ALL MEASUREMENTS ARE BASED ON BUILDINGS AT GROUND LEVEL.
4. INTERIOR WALLS AND DIMENSIONS NOT VERIFIED.

LEGEND

S/W = SIDEWALK
PL = PROPERTY LINE
TYP = TYPICAL

MERIDIAN OF OFFICIAL SURVEY S.E. 1

M.B. 1, PG. 2010

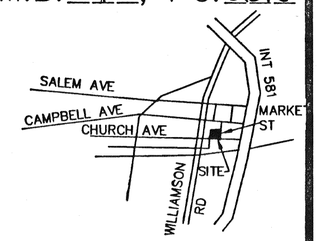

LOCATION MAP
NO SCALE

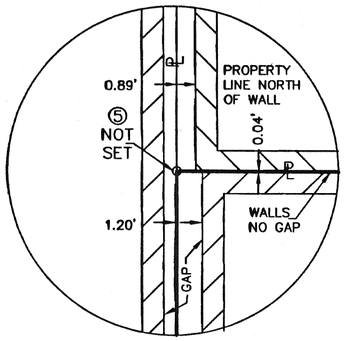

DETAIL CORNER #6
SCALE 1" = 5"

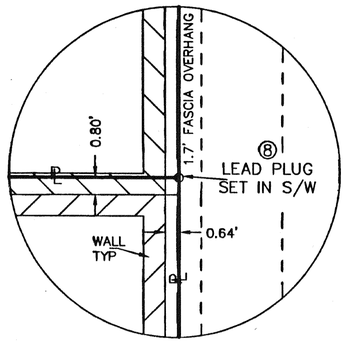

DETAIL CORNER #8
SCALE 1" = 5"

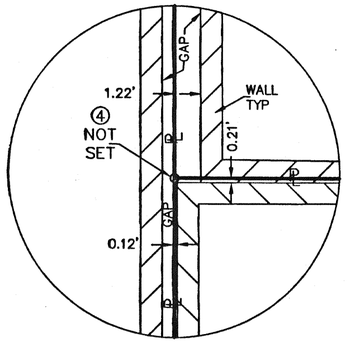

DETAIL CORNER #4
SCALE 1" = 5"

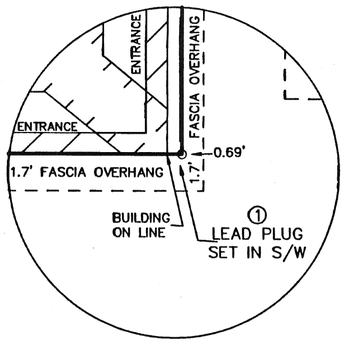

DETAIL CORNER #1
SCALE 1" = 5"

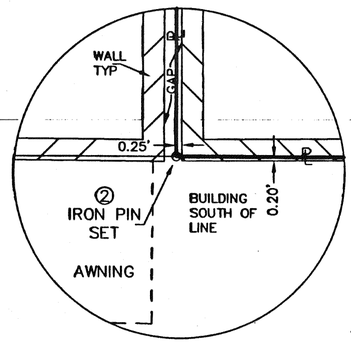

DETAIL CORNER #2
SCALE 1" = 5"

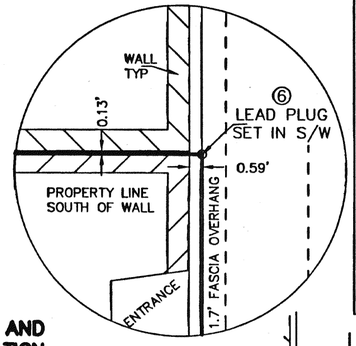

DETAIL CORNER #6
SCALE 1" = 5"

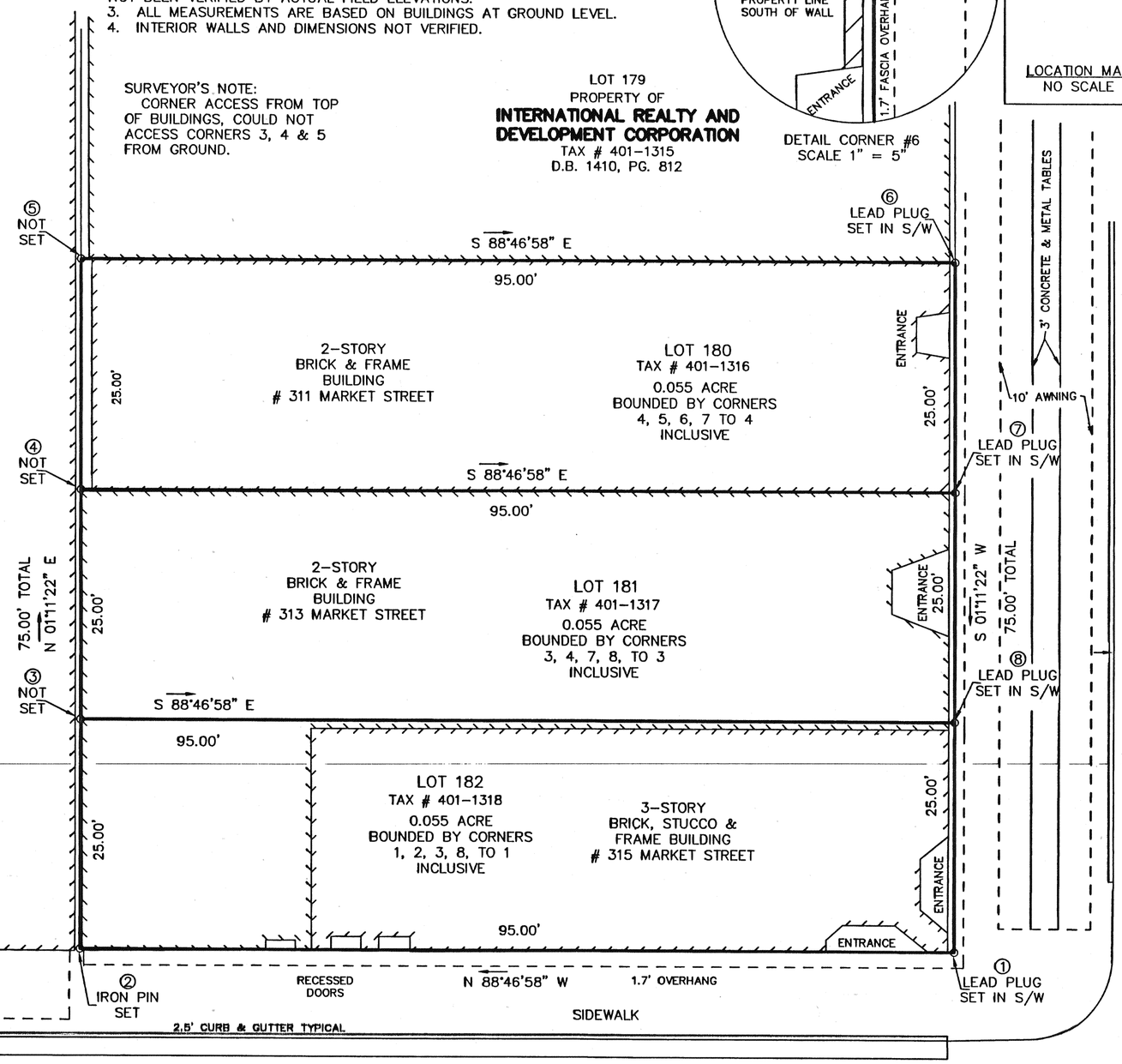

THIS BOUNDARY SURVEY IS BASED ON A CURRENT FIELD SURVEY. TROMPETER BROTHERS, L.C. IS THE OWNER OF RECORD, SEE D.B. 1731, PG. 1840.

CHURCH AVENUE, S.E.

(FORMERLY ROBERTSON STREET)

50' WIDE

BOUNDARY SURVEY FOR

O. SANDS WOODY, JR. & MARILYN A. WOODY

SHOWING LOTS 180, 181 & 182, WARD 5, ROANOKE LAND & IMPROVEMENT CO.

ALSO KNOWN AS LOTS 18, 19 & 20, BLOCK 10 OFFICIAL SURVEY, S.E. #1

SITUATE ON CHURCH AVE., S.E. & MARKET AVE., S.E.

ROANOKE, VIRGINIA

IN THE CLERK'S OFFICE OF THE CIRCUIT COURT OF THE CITY OF ROANOKE, VIRGINIA THIS MAP WAS PRESENTED WITH THE CERTIFICATE OF ACKNOWLEDGMENT THERETO ATTACHED ADMITTED TO RECORD AT 11:40 O'CLOCK A.M. ON THIS 23 DAY OF September 1999.

TESTE: ARTHUR B. CRUSH, III
CLERK

BY: Kathy S. Gallaher
DEPUTY CLERK

COMMONWEALTH OF VIRGINIA
JOHN T. PARKER
No. 1076
Sept 21, 1999
LAND SURVEYOR

TAX # 401-1316
401-1317
401-1318
CALC: LRD
DRAWN: Z/LRD/3

TPP&S
ENGINEERS SURVEYORS PLANNERS
T. P. PARKER & SON
816 Boulevard
Post Office Box 39
Salem, Virginia 24153

SCALE: 1" = 10'
DATE: SEPTEMBER 21, 1999
W.O. 99-1038
N.B. JR-183

M.B. 1, PG. 2010