1. FOR 6" FIRE LINE. EXTERIOR VAULT DIMENSIONS SHALL BE (L x W x H) 6' X 6' X 5' WITH DOMESTIC TAP MADE INSIDE VAULT AS SHOWN BELOW.
2. FOR 8" FIRE LINE EXTERIOR VAULT DIMENSIONS SHALL BE (L X W X H) 6' X 6' X 6' WITH DOMESTIC TAP MADE OUTSIDE VAULT. BALL VALVE WITH LOCKING TABS SHALL BE PROVIDED INSIDE VAULT TO ALLOW FOR ISOLATION OF DOMESTIC METER.
3. SINGLE DETECTOR CHECK VALVE SHALL BE WILKINS 310 DALM , WATTS ES-SS01T - BP, OR APPROVED EQUAL WITH FLANGED END CONNECTIONS, BYPASS ASSEMBLY, AND ONE OS&Y GATE VALVE.
4. BYPASS ASSEMBLY SHALL INCLUDE 2 BALL VALVES TO ISOLATE METER.
5. DOMESTIC SHALL BE TYPE K COPPER WITH GRIP JOINT FITTINGS, BALL VALVE AT TAPPING SADDLE (WITH LOCKING TABS) AND CHECK VALVE ON OUTLET.
6. DOMESTIC METER AND BYPASS METER TO BE SUPPLIED BY OWNER AND INSTALLED BY VENDOR.
7. "UNI FLANGE" ADAPTOR FLANGE, OR APPROVED EQUAL, OR FLANGED - PLAIN END PIPING REQUIRED FOR INLET AND OUTLET PIPING.
8. VAULT TO BE INSTALLED ON MIN. 6" COMPACTED VDOT #57 STONE WITH FILTER FABRIC PLACED BETWEEN BOTTOM OF VAULT AND STONE BEDDING. FILTER FABRIC TO EXTEND VERTICALLY A MINIMUM OF 6" ON ALL FOUR SIDES OF VAULT.

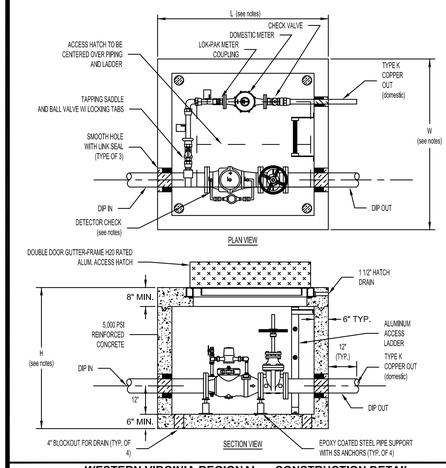

WESTERN VIRGINIA REGIONAL - CONSTRUCTION DETAIL

COMMERCIAL METER VAULT — 02/10/15 — **W-7**

1. FILTER FABRIC TO BE INSTALLED BETWEEN BOTTOM OF PIPE AND STONE BEDDING. FABRIC TO EXTEND VERTICALLY A MINIMUM OF 6" FROM BOTTOM OF VAULT. (FULL CIRCUMFERENCE).

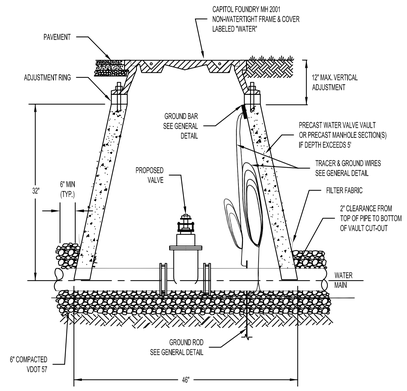

WESTERN VIRGINIA REGIONAL - CONSTRUCTION DETAIL

WATER LINE VALVE & VAULT — 01/01/14 — **W-9**

1. PUBLIC HYDRANTS SHALL BE PAINTED SILVER WITH AN OIL-BASED PAINT. PRIVATE HYDRANTS SHALL ALSO BE PAINTED SILVER WITH AN OIL-BASED PAINT UNLESS OTHERWISE SPECIFIED BY THE JURISDICTIONAL FIRE MARSHALL.
2. FIRE HYDRANT SHALL BE INSTALLED 2' MIN. AND 4' MAX. FROM BACK OF CURB OR 6' MIN. AND 12' MAX. FROM EDGE OF PAVEMENT WHEN CURB IS NOT PRESENT. FIRE HYDRANT TO BE INSTALLED WITHIN RIGHT-OF-WAY OR EASEMENT LINE.
3. AREA AROUND HYDRANT AT A RADIUS OF 4' TO BE LEVEL AND UNOBSTRUCTED.
4. WATERPROOF BAGS OR OUT OF SERVICE RINGS SHALL BE PLACED OVER ALL NEWLY INSTALLED FIRE HYDRANTS.
5. HYDRANT ASSEMBLIES SHALL BE RODDED AND RESTRAINED WITH APPROVED M.J. GLAND RESTRAINTS. HIGH PRESSURE (OVER 150 PSI) ALSO REQUIRES CONCRETE THRUST BLOCKS AS SHOWN BELOW.
6. IF DURING CONSTRUCTION THE SEASONAL WATER LEVEL IS NOTED TO BE ABOVE THE DRAIN OUTLETS OF THE PROPOSED HYDRANT, THE PARTICIPATING UTILITY WILL BE NOTIFIED IMMEDIATELY SO THAT THE HYDRANT CAN BE RELOCATED TO A SUITABLE LOCATION. OMITTED, OR THE DRAIN HOLE PLUGGED.
7. TWO WRAPS OF TRACER WIRE SHALL BE WRAPPED AROUND BASE OF HYDRANT.
8. APPROVED MODELS - AVK MODEL 2780, AFC MODEL B-84-B-5, MUELLER CENTURION A423, KENNEDY K81D OR EQUIVALENT.
9. WHERE HYDRANT LATERAL(S) IS APPROVED BY THE PARTICIPATING UTILITY TO BE LONGER IN LENGTH, MAKING THE CONTINUOUS SECTION OF PIPE ON EACH SIDE OF THE GATE VALVE UNFEASIBLE, RESTRAINED PIPE JOINTS SHALL BE INSTALLED BETWEEN THE TEE AND GATE VALVE IN LIEU OF RODDING. HOWEVER, A RODDED CONTINUOUS SECTION OF PIPE SHALL ALWAYS BE INSTALLED BETWEEN THE GATE VALVE AND HYDRANT.

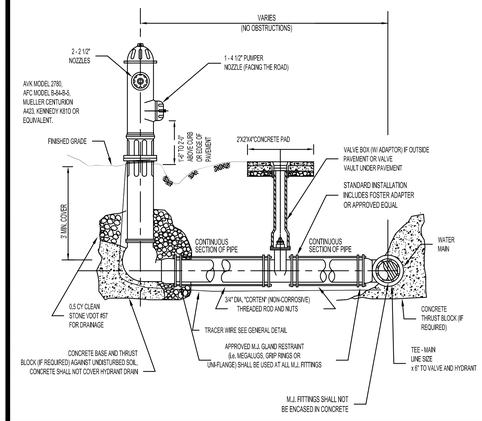

WESTERN VIRGINIA REGIONAL - CONSTRUCTION DETAIL

FIRE HYDRANT ASSEMBLY — 02/10/15 — **W-17**

1. MATERIALS AND FABRICATION IN ACCORDANCE WITH ASTM C478-09.
2. STEPS SHALL BE VERTICALLY ALIGNED. FIRST STEP SHALL BE WITHIN 12" OF COVER, BOTTOM STEP SHALL BE WITHIN 24" OF BOTTOM OF MANHOLE.
3. THE FRAME AND COVER SHALL BE PROPERLY ALIGNED WITH THE 2 FOOT OPENING OF THE MANHOLE STRUCTURE AND BOLTED IN PLACE.
4. RELINER BY DURAN INSIDE DROP BOWLS AND PIPE BRACKETS WILL BE ALLOWED.
5. GROUT ANNULAR SPACE BETWEEN PIPE AND PRECAST MANHOLE ON INSIDE OF MANHOLE.
6. STEPS SHALL BE A MINIMUM OF 60 DEGREES FROM DROP & ALIGNED VERTICALLY.
7. INSIDE DROP ONLY ALLOWED WHEN DEPTH EXCEEDS 12' AND APPROVED BY PARTICIPATING UTILITY.
8. 6' MINIMUM DIAMETER MANHOLE REQUIRED FOR TWO OR MORE INSIDE DROP CONNECTIONS (MAIN LINE OR LATERAL).
9. SEE FRAME AND COVER DETAIL.
10. SEE DETAIL S-01 FOR EXTERIOR COATING AND JOINT SEAL REQUIREMENTS.

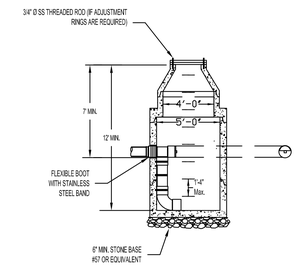

WESTERN VIRGINIA REGIONAL - CONSTRUCTION DETAIL

INSIDE DROP MANHOLE — 01/01/14 — **S-3**

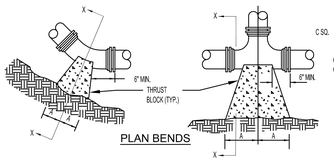

PLAN BENDS

PLAN AND ELEVATION PLUGS

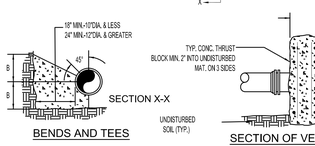

BENDS AND TEES

SECTION OF VERTICAL BEND

NOTES

1. FOR VERT. BEND DOWN IN EXCESS OF 11 1/4" BEND, ANCHORAGE SHALL BE DESIGNED BY ENGINEER.
2. FOR VERT. BEND UPWARD, BLOCKING TO BE SIMILAR TO THAT FOR HORZ. BEND.
3. GLANDS & BOLTS SHALL BE PROTECTED FROM CONC. WITH PLASTIC SHEETING WHEN POURING THRUST BLOCKS.
4. ALL THRUST BLOCK & SUPPORT CONCRETE SHALL BE 3000 PSI READY MIX CONCRETE.
5. THRUST BLOCKS WITH "B" DIMENSION GREATER THAN 30" SHALL HAVE THE RESTRAINED PIPE INSTALLED WITH A MINIMUM OF 4' OF COVER.
6. REFER TO "MINIMUM THRUST RESTRAINT OF PIPE JOINTS DESIGN LENGTHS"
7. DETAIL FOR WHEN THRUST BLOCKS ARE REQUIRED TO BE USED.
8. WHEN THRUST BLOCK IS REQUIRED BUT NOT FEASIBLE TO CONSTRUCT, THRUST COLLAR SHALL BE USED. SEE "THRUST COLLAR" DETAIL.

PRESSURE = 200psi
BEARING = 2000psf
FACTOR OF SAFETY = 1.5

PIPE SIZE	90° BEND		45° BEND		22 1/2° BEND		11 1/4° BEND		TEE		PLUG	
	A	B	A	B	A	B	A	B	A	B	C	D
4"	8"	12"	8"	8"	6"	6"	6"	6"	11"	9"	10"	6"
6"	18"	12"	8"	10"	8"	8"	8"	8"	11"	10"	12"	18"
8"	18"	13"	10"	10"	8"	8"	8"	8"	11"	12"	12"	24"
10"	20"	16"	12"	14"	8"	12"	8"	12"	14"	16"	16"	30"
12"	20"	16"	12"	14"	8"	12"	8"	12"	14"	16"	16"	30"
16"	26"	20"	16"	18"	11"	13"	11"	13"	18"	20"	20"	36"
24"	82"	42"	62"	30"	44"	22"	22"	16"	82"	42"	82"	42"
30"	185"	42"	100"	42"	52"	42"	40"	30"	185"	42"	185"	42"

WESTERN VIRGINIA REGIONAL - CONSTRUCTION DETAIL

THRUST BLOCK REQUIREMENTS — 02/10/15 — **W-18**

FACTOR OF SAFETY = 1.5

PIPE SIZE	MAT'L	90° BEND	45° BEND	22 1/2° BEND	11 1/4° BEND	VALVE / PLUG (NOTE 2)	TEE BRANCH (NOTE 3)	REDUCER (NOTE 4)	45° VERT.	22 1/2° VERT.	11 1/4° VERT.
6"	D.I.	28'	21'	6'	3'	50'	26'	26'	21'	10'	5'
8"	D.I.	36'	21'	8'	4'	65'	41'	27'	27'	13'	7'
10"	D.I.	43'	21'	9'	5'	77'	53'	26'	32'	16'	8'
12"	D.I.	51'	21'	10'	5'	91'	67'	27'	38'	18'	9'
6"	PVC	29'	21'	6'	3'	78'	25'	40'	32'	16'	8'
8"	PVC	37'	21'	8'	4'	102'	49'	43'	42'	21'	10'
10"	PVC	44'	21'	9'	5'	122'	68'	41'	51'	25'	12'
12"	PVC	51'	21'	11'	6'	143'	89'	42'	60'	29'	15'

1. ALL JOINTS SHALL BE RESTRAINED ON BOTH SIDES OF THE FITTING AND DOCUMENTED BY THE INSPECTOR FOR THE LENGTH SHOWN UNLESS OTHERWISE INDICATED.
2. RESTRAINED LENGTH SHOWN REFERS TO ANY DESIGNED OR POTENTIAL LINE STOP, INCLUDING ALL GATE VALVES.
3. RESTRAINED LENGTH SHOWN REFERS TO THE BRANCH LINE ONLY. THE CONTINUOUS PIPE LENGTH OF THE MAIN RUN SHALL BE A MINIMUM OF 10' ON EACH SIDE OF THE TEE.
4. RESTRAINED LENGTH SHOWN IS BASED ON REDUCING PIPE DIAMETER TO ONE SIZE SMALLER THAN PIPE LISTED (ANY OTHER DIAMETER REDUCTION WILL REQUIRE ADDITIONAL CALCULATIONS BEFORE INSTALLATION). RESTRAINED LENGTH SHOWN IS UPSTREAM ON THE LARGE SIDE OF THE REDUCER.
5. 12" AND SMALLER DIAMETER: IF UNDER 150 PSI WORKING PRESSURE, RESTRAINED JOINT(S) ARE TO BE USED. IF EQUAL TO OR OVER 150 PSI WORKING PRESSURE, BOTH THRUST BLOCK(S) AND RESTRAINED JOINT(S) SHALL BE USED.

   LARGER THAN 12" DIAMETER: IF UNDER 100 PSI WORKING PRESSURE, RESTRAINED JOINT(S) ARE TO BE USED. IF EQUAL TO OR OVER 100 PSI WORKING PRESSURE, BOTH THRUST BLOCK(S) AND RESTRAINED JOINT(S) SHALL BE USED (UNLESS OTHERWISE APPROVED BY THE PARTICIPATING UTILITY).
6. FOR RESTRAINED JOINT PIPING REQUIREMENTS AT FITTING R.J. PVC AND R.J. DIP MAY BE USED INTERCHANGEABLY WITH APPROVAL FROM PARTICIPATING UTILITY. CONTRACTOR MUST PLAN ACCORDINGLY FOR THE DIFFERENCE IN PVC AND DIP BELL AND SPIGOT DIMENSIONS.

WESTERN VIRGINIA REGIONAL - CONSTRUCTION DETAIL

MINIMUM THRUST RESTRAINT OF PIPE JOINTS DESIGN LENGTHS — 02/10/15 — **W-19**

1. MATERIALS AND FABRICATION IN ACCORDANCE WITH ASTM C478-09.
2. WHEN USED AS SAMPLING MANHOLE FLOW SHALL PASS STRAIGHT THROUGH, i.e., 180°.
3. STEPS SHALL BE VERTICALLY ALIGNED. FIRST STEP SHALL BE WITHIN 12" OF COVER, BOTTOM STEP SHALL BE WITHIN 24" OF BOTTOM OF MANHOLE.
4. FRAME AND COVER SHALL BE PROPERLY ALIGNED WITH THE 2 FOOT OPENING OF THE MANHOLE STRUCTURE AND BOLTED IN PLACE.
5. FLAT TOP MANHOLES MAY ONLY BE SUBSTITUTED WITH THE PERMISSION OF THE PARTICIPATING UTILITY.
6. FLEXIBLE JOINT MANHOLE CONNECTION SHALL BE AS MANUFACTURED BY PRES-SEAL GASKET CORPORATION OR EQUAL.
7. GROUT ANNULAR SPACE BETWEEN PIPE AND PRECAST MANHOLE ON INSIDE OF MANHOLE.
8. WHEN REPLACING AN EXISTING MANHOLE OR INSTALLING A NEW PRECAST MANHOLE ON AN EXISTING SEWER, A MINIMUM OF SIX FEET (6') OF EXISTING PIPE SHALL BE REMOVED AND REPLACED WITH NEW MATERIAL ON INLET AND OUTLET OF MANHOLE.
9. MANHOLES WHERE THE INVERT IS LOWER THAN THE NORMAL GROUNDWATER ELEVATION (I.E., ALONG CREEKS, RIVERS, LOWLYING AREAS, ETC.) SHALL HAVE A FULL EXTERIOR COATING AND JOINT WRAP APPLIED IN ADDITION TO JOINT SEALANT. SEE NOTES 10 & 11.
10. IF REQUIRED EXTERIOR VERTICAL WALL SURFACES SHALL BE FACTORY COATED IN ACCORDANCE WITH THE MANUFACTURERS RECOMMENDATION. COATING SHALL BE HIGH BUILD COAL TAR EPOXY MEETING ASTM D1027. COATING SHALL BE APPLIED IN TWO COATS TO A MINIMUM TOTAL THICKNESS OF 16 MILS.
11. IF REQUIRED ALL MANHOLES SHALL UTILIZE AN EXTERNAL FRAME AND JOINT SEAL AT ALL JOINTS AND AT THE FRAME/CHIMNEY INTERFACE. SEAL SHALL BE MADE OF EPDM RUBBER IN ACCORDANCE WITH ASTM D412 OR POLYOLEFIN BACKED EXTERIOR JOINT WRAP IN ACCORDANCE WITH ASTM E-1745, C-877, AND C-990. EDM SEAL SHALL HAVE A MINIMUM THICKNESS OF 60 MILS. POLYOLEFIN BACKED EXTERIOR JOINT WRAP SHALL HAVE A BACKING BAND ELEMENT WITH MINIMUM THICKNESS OF 4 MILS. AND BUTYL ROLLER ADHESIVE WITH MINIMUM THICKNESS OF 60 MILS. SEAL SHALL AGGRESSIVELY BOND TO CONCRETE AND METAL STRUCTURES.
12. FOR PIPE LARGER THAN 15 INCHES IN DIAMETER, THE MINIMUM INSIDE DIAMETER OF THE MANHOLE SHALL BE IN ACCORDANCE WITH MANUFACTURERS RECOMMENDATIONS BASED ON PIPE SIZE AND ANGLE BETWEEN INLET AND OUTLET PIPING.
13. 6' MINIMUM DIAMETER MANHOLE SHALL BE REQUIRED WHEN DEPTHS EXCEED 15' UNLESS OTHERWISE APPROVED BY PARTICIPATING UTILITY.

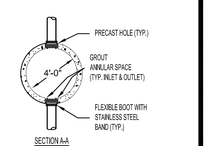

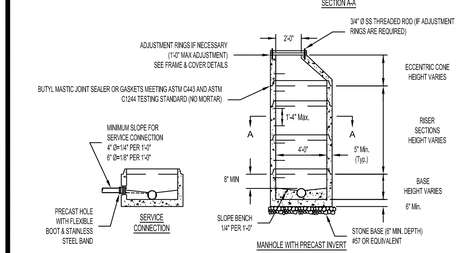

WESTERN VIRGINIA REGIONAL - CONSTRUCTION DETAIL

4' STANDARD MANHOLE FOR PIPE 15" OR SMALLER (FOR DEPTHS UP TO 15 FEET) — 08/01/15 — **S-1**

1. PIER REQUIRED WHEN STORM DRAIN OR OTHER PIPES CROSSES OVER THE OTHER UTILITY WITH A VERTICAL CLEARANCE OF LESS THAN 18".
2. PIER TO BE BUILT ON UNDISTURBED EARTH.
3. CONCRETE TO BE READY MIX, CLASS A3.

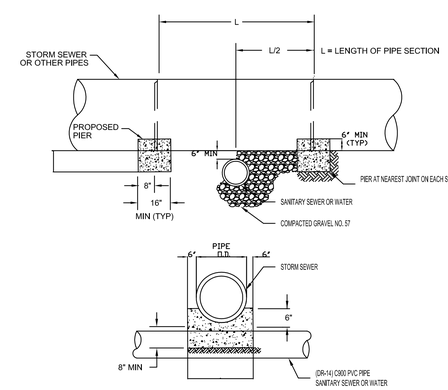

WESTERN VIRGINIA REGIONAL - CONSTRUCTION DETAIL

CONCRETE PIER — 01/01/14 — **G-8**

DETAIL ADDED

City of Roanoke
Planning, Building, & Development
COMPREHENSIVE DEVELOPMENT PLAN
APPROVED
by Aaron Cypher 09/20/2019

POPE ARCHITECTS
POPE ARCHITECTS, INC.
1295 BANDANA BLVD N, SUITE 200
ST. PAUL, MN
55108-2735
(651) 642-9200 | FAX (651) 642-1101
www.popearch.com

RICHFIELD LIVING
AT THE ROANOKE CAMPUS
Roanoke, Virginia

RICHFIELD

CWA
CALDWELL WHITE ASSOCIATES
ENGINEERS / SURVEYORS / PLANNERS
4005 MELROSE AVENUE
P.O. BOX 6260
ROANOKE, VIRGINIA 24017-0260
(540) 366-8400
FAX: (540) 366-8702

Scale: As Shown
W.O. 19-0034
Designed: C.L. White
Drawn: C.L. White

Key Plan

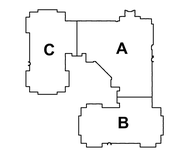

DETAILS - WATER AND SANITARY SEWER

Issues and Revisions:

	04 / 19 / 2019	DESIGN DEVELOPMENT ISSUE
	06 / 06 / 2019	PERMIT SET
2	08 / 13 / 2019	PER 2ND CITY SITE REVIEW

COMMONWEALTH OF VIRGINIA
CORBIN L. WHITE
License No. 23843
08 - 13 - 19
PROFESSIONAL ENGINEER

Commission No: 63132-18180
Drawn by:
Checked by:

SHEET

C8.4