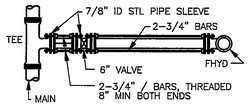

DETAIL STRAPPING FIRE HYDRANT TO MAIN

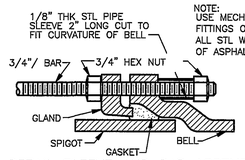

DETAIL SLEEVE AND BAR ASSEMBLY

STRAPPING VALVE & FIRE HYDRANT TO MAIN

NO SCALE

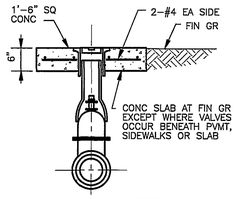

VALVE BOX SETTING

NO SCALE

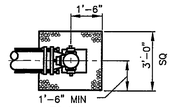

PLAN

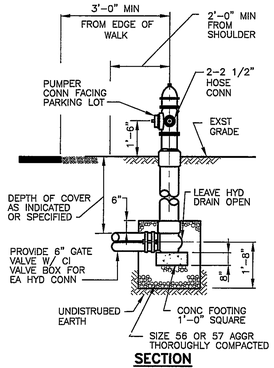

SECTION

FIRE HYDRANT INSTALLATION

NO SCALE

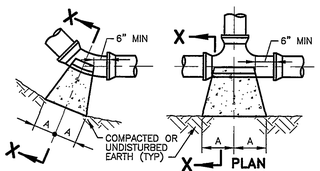

PLAN BENDS

PLAN TEES

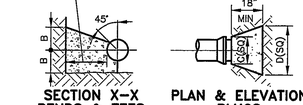

SECTION X-X BENDS & TEES

PLAN & ELEVATION PLUGS

SIZE	1/4 BEND		1/8 BEND		1/16 BEND		TEES		PLUGS	
	A	B	A	B	A	B	A	B	C	D
6"	16"	10"	9"	10"	6"	8"	10"	12"	10"	21"
8"	22"	13"	12"	13"	8"	10"	13"	16"	12"	29"
10"	26"	17"	4"	17"	10"	13"	16"	20"	14"	36"
12"	29"	21"	16"	21"	11"	16"	18"	24"	16"	41"
14"	35"	24"	19"	24"	12"	20"	22"	27"	18"	48"
16"	38"	27"	21"	27"	12"	24"	24"	30"	20"	54"
18"	42"	31"	24"	30"	15"	24"	27"	36"	30"	60"
24"	54"	40"	30"	40"	24"	26"	36"	48"	48"	78"

NOTES: 1. PROVIDE 2 SQ.FT. BEARING AREA FOR PIPE SIZES LESS THAN 6".
2. BASED ON 2000 PSF SOIL BEARING AND 100 PSI STATIC PRESSURE + AWWA WATER HAMMER.

THRUST BLOCKS

NO SCALE

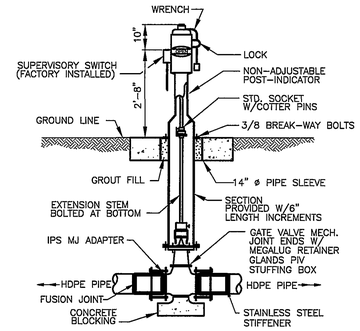

POST INDICATOR VALVE (PIV)

NO SCALE

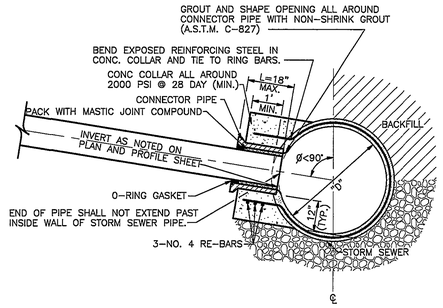

PVC PIPE CONNECTION INTO STORM SEWER

NO SCALE

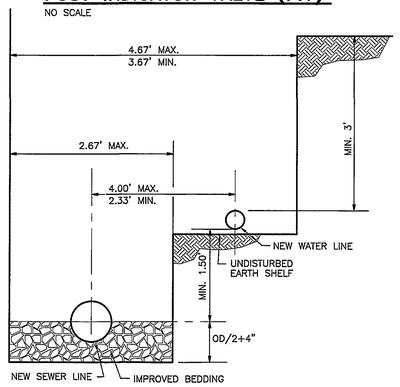

METHOD OF PLACEMENT OF WATER LINE AND SEWER LINE WITHIN THE SAME TRENCH

NO SCALE

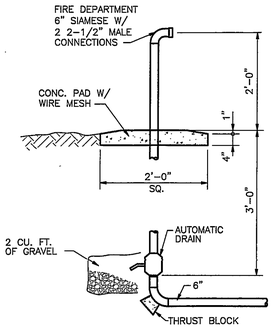

FIRE DEPARTMENT CONNECTION

NO SCALE

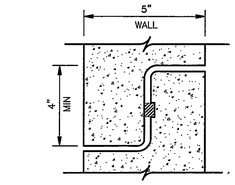

O-RING JOINT DETAIL

NO SCALE

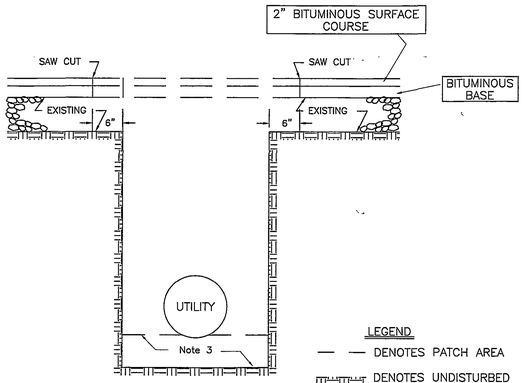

NOTES:
1. Surface and base replacement will generally be required to match existing asphalt layers and shall be compacted in lifts according to Virginia Department of Transportation Road and Bridge Specifications.
2. Bedding material shall be according to requirement of each utility.
3. Saw cut to be made with mechanical saw and sides to be tacked with bituminous material type RC-250 or equal.
4. Street opening permit required before any work in public right-of-way. Contact City Development Assistance Center for permit, Phone (853-1090).
5. Contact City Engineering Inspector 48 hours prior to beginning any work, Phone (853-2856)

TYPICAL DETAIL PAVEMENT CUTTING AND REPLACEMENT

NO SCALE

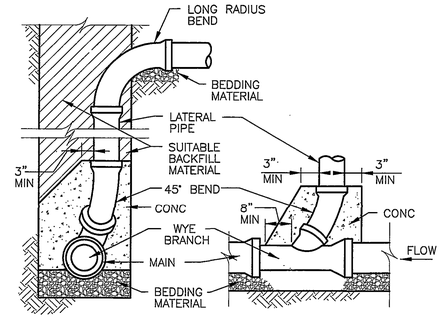

VERTICAL CONNECTION

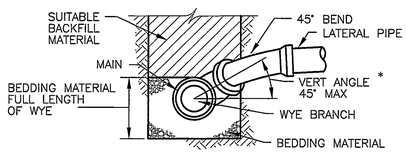

STANDARD CONNECTION VERTICAL ANGLE 45° MAX.

* WHERE VERT ANGLE EXCEEDS 45°, CONN SHALL BE CONC ENCASED.

GRAVITY WYE CONNECTION

NO SCALE

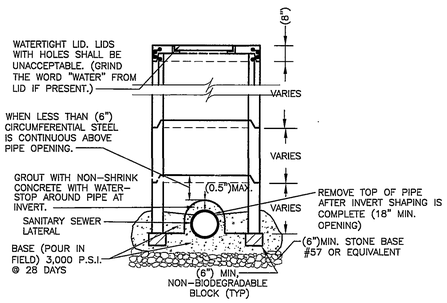

NOTES:
1. VACUUM OR EXFILTRATION TESTING SHALL BE USED. VACUUM TESTING SHALL MEET THE SAME STANDARD FOR CONCRETE MANHOLES. EXFILTRATION TESTING SHALL HAVE NO LEAKAGE WITHIN 1 HOUR.
2. "AQUABLOK" WASTEWATER ACCESS CHAMBERS MAY BE SUBSTITUTED. TESTING OF "AQUABLOK" SHALL BE APPLICABLE PLUMBING CODE FOR SEWER LATERALS.

SAMPLING MANHOLE DETAIL

NO SCALE

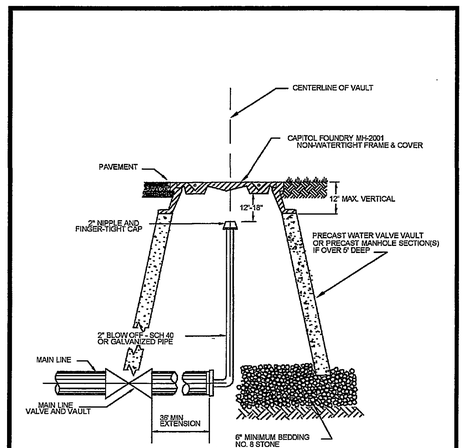

WESTERN VIRGINIA WATER AUTHORITY - CONSTRUCTION STANDARDS

REVISION DATE			BLOW-OFF ASSEMBLY FOR MAIN LINE TEMPORARY TERMINIATION	W-10
07/01/04				

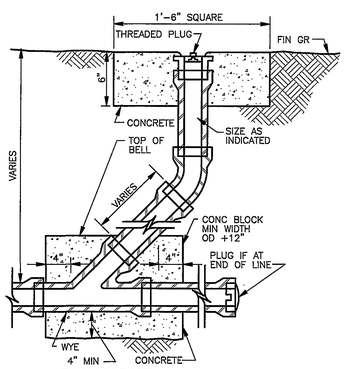

CLEANOUT

NO SCALE

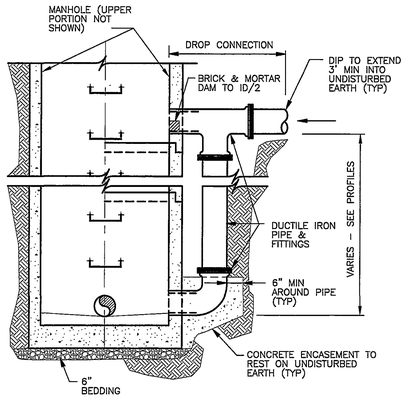

DROP MANHOLE CONNECTION

NO SCALE

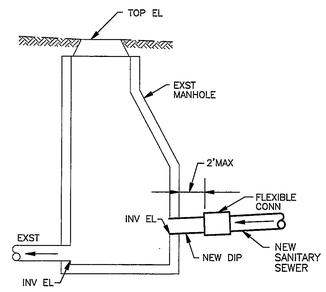

NOTES:
1. TAP INTO EXST MANHOLE BY CORING
2. SECURE 8" DIP SPOOL PIECE, IN PLACE, WITH NON-SHRINK GROUT
3. CONNECT 8" DIP SPOOL PIECE TO NEW 8" SANITARY SEWER WITH A FLEXIBLE CONNECTION
4. RESHAPE MANHOLE INVERT

CONNECTION TO EXST MANHOLE

NO SCALE

HSMM
ARCHITECTS ENGINEERS PLANNERS

HAYES, SEAY, MATTERN & MATTERN, INC.
1315 FRANKLIN ROAD
ROANOKE, VA 24016
(540) 857-3100 WWW.HSMM.COM

SEALS

COMMONWEALTH OF VIRGINIA
MARTY L. CROW
No. 036331
9/20/05
PROFESSIONAL ENGINEER

CONSULTANT

CONSULTANT

CARILION Health System

RIVERSIDE CORPORATE CENTRE OFFICE BUILDING

CARILION HEALTH SYSTEM

ROANOKE, VIRGINIA

REV	DATE	DESCRIPTION	APP

COMM NO: 40049
ISSUE DATE: SEPTEMBER 16, 2005
DESIGNED BY: TJG DRAWN BY: TJG
CHECKED BY: MLC SUBMITTED BY: GLH

© HAYES, SEAY, MATTERN & MATTERN, INC., 2005. ALL RIGHTS RESERVED.

CIVIL

DETAILS

C502