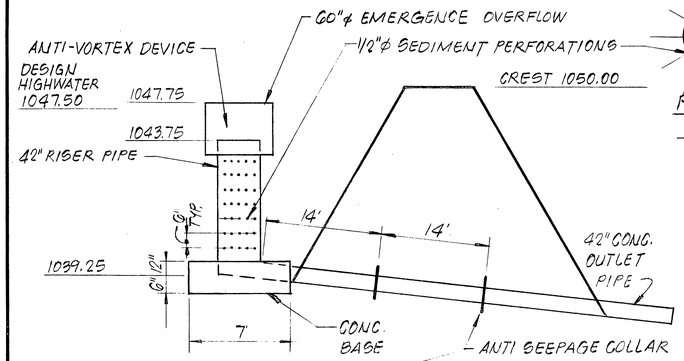

TEMPORARY SEDIMENT BASIN OUTLET DEVICE
NO SCALE

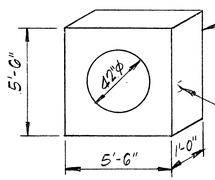

REINF NOT SHOWN - REINF SAME AS "TYP ANTI-SEEPAGE COLLAR" DETAIL SHOWN ON THIS SHEET.

ANTI SEEPAGE COLLAR (CONC)
NO SCALE

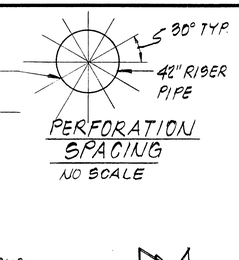

PERFORATION SPACING
NO SCALE

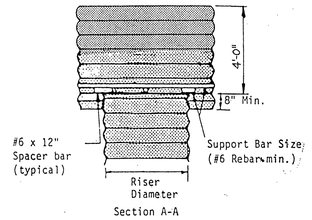

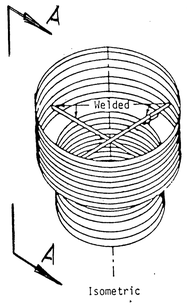

Cylinder is 12 gage corrugated metal pipe

Notes:
1. The cylinder must be firmly fastened to the top of the riser.
2. Support bars are welded to the top of the riser or attached by straps bolted to top of riser

ANTI VORTEX DEVICE
NO SCALE

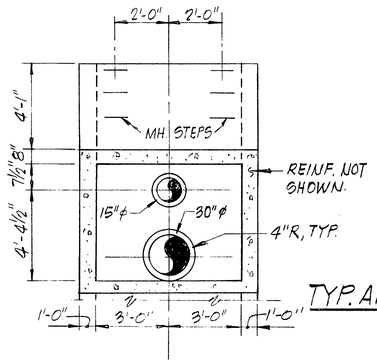

SECTIONAL ELEVATION OF DISCHARGE WALL OUTLET # 6
NO SCALE

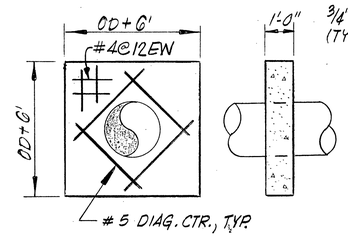

TYP. ANTI-SEEPAGE COLLAR
NO SCALE

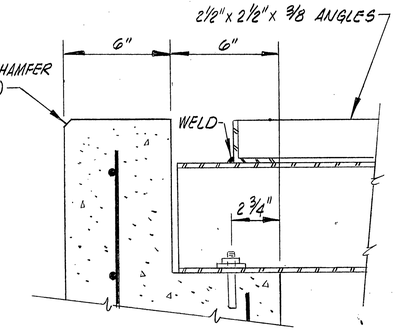

SECTION (38.3 / 38)
NO SCALE

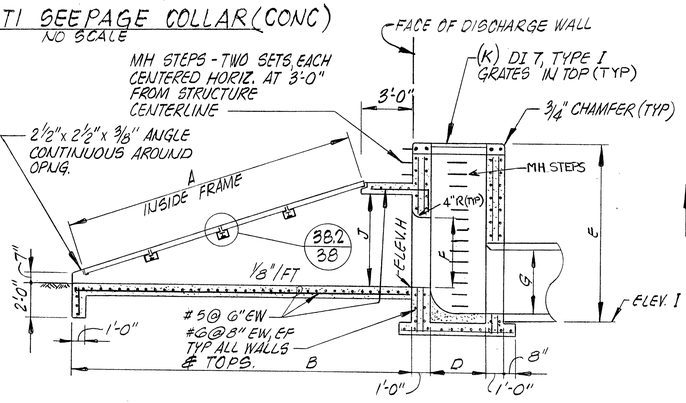

SECTION (38.1 / 38)
NO SCALE

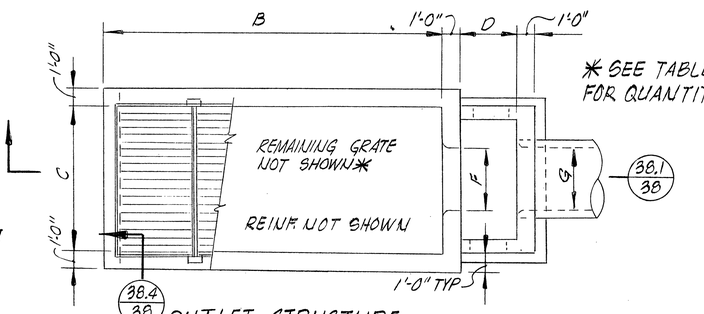

* SEE TABLE FOR QUANTITY.

OUTLET STRUCTURE PLAN
NO SCALE

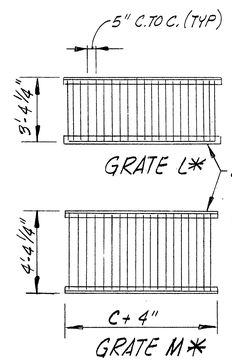

NOTE
2"ϕ BAR @ 10.68 LBS/FT
OR #14 BILLET STEEL BAR
@ 7.65 LBS/FT A.S.T.M.
A615 GRADE 60

GRATE L*

GRATES SHALL GALVANIZED AFTER FABRICATION

GRATE M*

GRATE DETAIL
NO SCALE

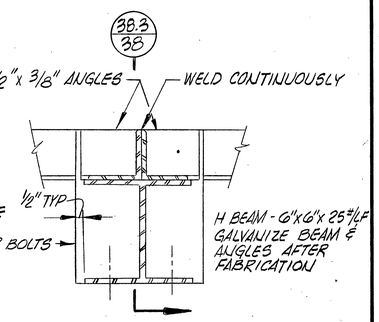

SECTION (38.2 / 38)
NO SCALE

OUTLET STRUCTURE - DIMENSION TABLE

OUTLET STRUCTURES	#1	#2	#3	#6
A	14'-8 1/2"	23'-7"	23'-7"	14'-8 1/2"
B	19'-0"	25'-10"	25'-10"	19'-0"
C	8'-0"	11'-0"	10'-0"	6'-0"
D	3'-0"	6'-0"	6'-0"	3'-0"
E	10'-0"	10'-7 1/2"	20'-3 1/2"	9'-6"
F	3'-6" DIA.	1 @ 2'-6" 2 @ 3'-0"	1 @ 1'-9" 2 @ 2'-6"	1 @ 2'-6" 1 @ 1'-3"
G	3'-6" DIA.	5'-6"	5'-0"	3'-6" DIA.
H	1061.00	1037.50	1017.50	1039.25
I	1060.00	1034.91	1009.21	1039.25
J	5'-0"	6'-6"	6'-6"	5'-0"
K	DOUBLE	TRIPLE	TRIPLE	DOUBLE
L	3	3	3	3
M	1	3	3	1

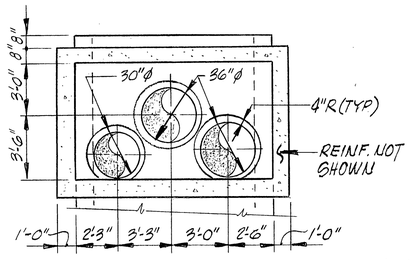

SECTIONAL ELEVATION OF DISCHARGE WALL OUTLET # 2
NO SCALE

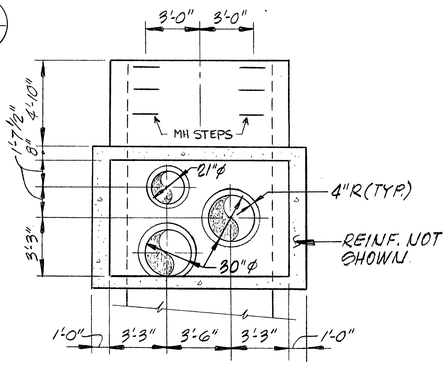

SECTIONAL ELEVATION OF DISCHARGE WALL OUTLET # 3
NO SCALE

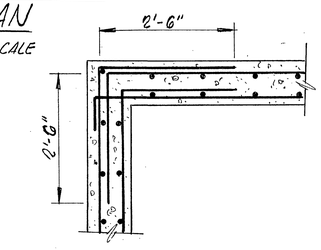

TYPICAL CORNER REINF. DETAIL
NO SCALE

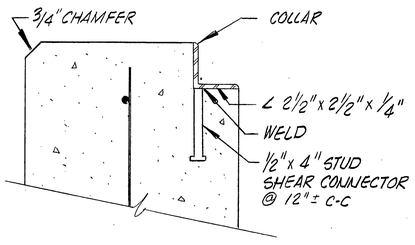

SECTION (38.4 / 38)
NO SCALE

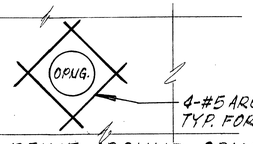

4-#5 AROUND EA. OPNG. TYP. FOR OUTLET STRUCTURES

ADDITIONAL REINF. AROUND OPNG. IN DISCHARGE WALL
NO SCALE

NOT TO SCALE

Mattern & Craig
CONSULTING ENGINEERS
SUITE 401, 707 S. JEFFERSON STREET, ROANOKE, VIRGINIA 24011, (703) 345-9342

DESIGNED: SWH
CHECKED: WJJ
APPROVED: SWH

COMMONWEALTH OF VIRGINIA
SAM H. McGHEE, III
No. 014912
PROFESSIONAL ENGINEER

REVISION	DATE	DESCRIPTION	BY	APP.

DATE
COMM.

ROANOKE CENTRE FOR INDUSTRY AND TECHNOLOGY
CITY OF ROANOKE, VIRGINIA

DETAILS

SHEET 38