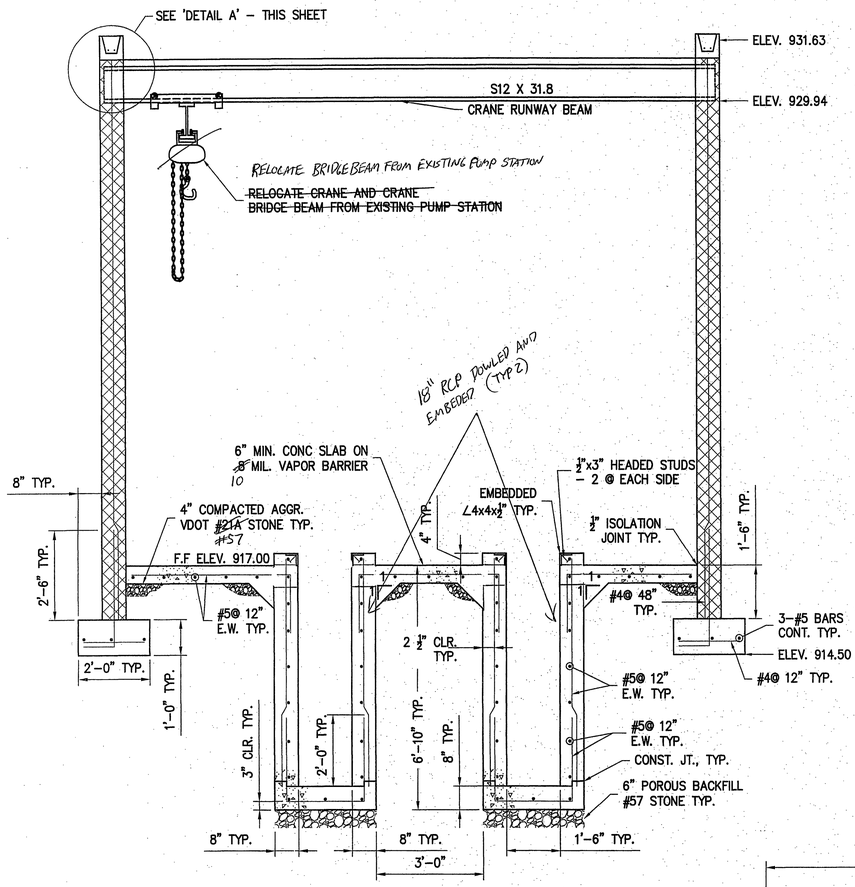

SECTION 19.1 (19 | 19)
SCALE: 1/2" = 1'-0"

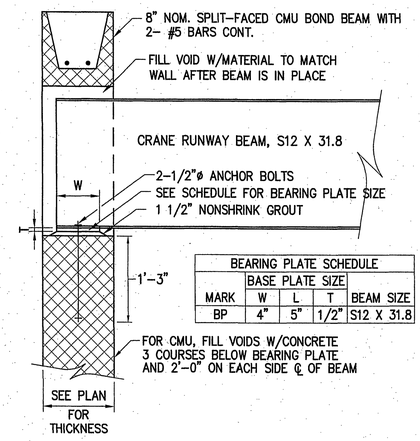

BEARING PLATE SCHEDULE				
	BASE PLATE SIZE			
MARK	W	L	T	BEAM SIZE
BP	4"	5"	1/2"	S12 X 31.8

DETAIL A
NOT TO SCALE

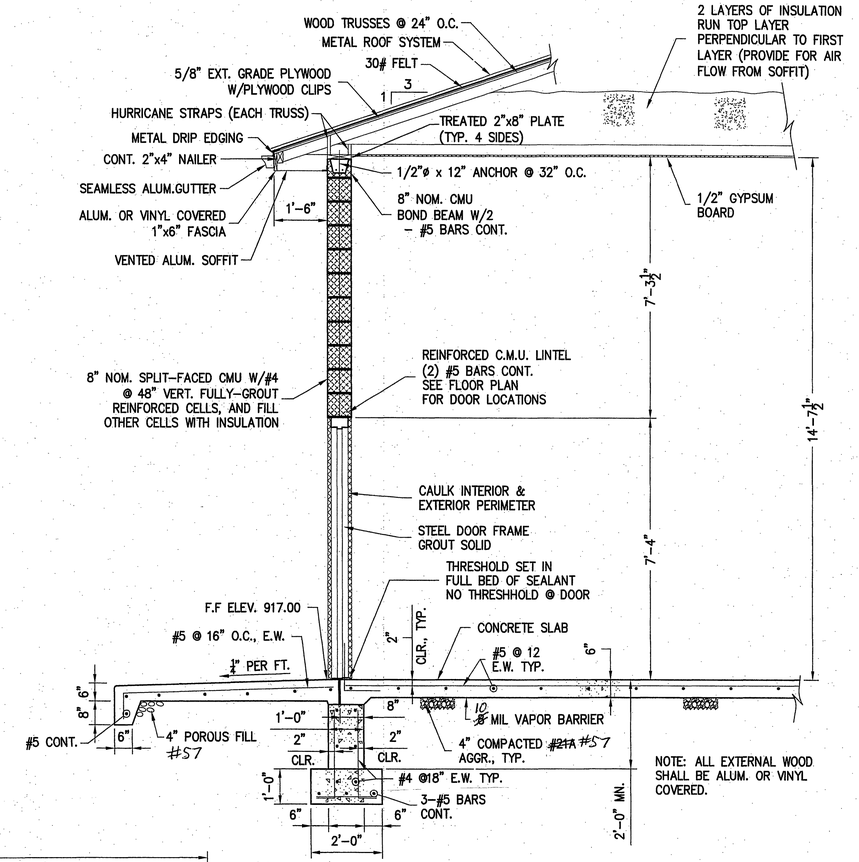

SECTION 19.2 (19 | 19)
SCALE: 1/2" = 1'-0"

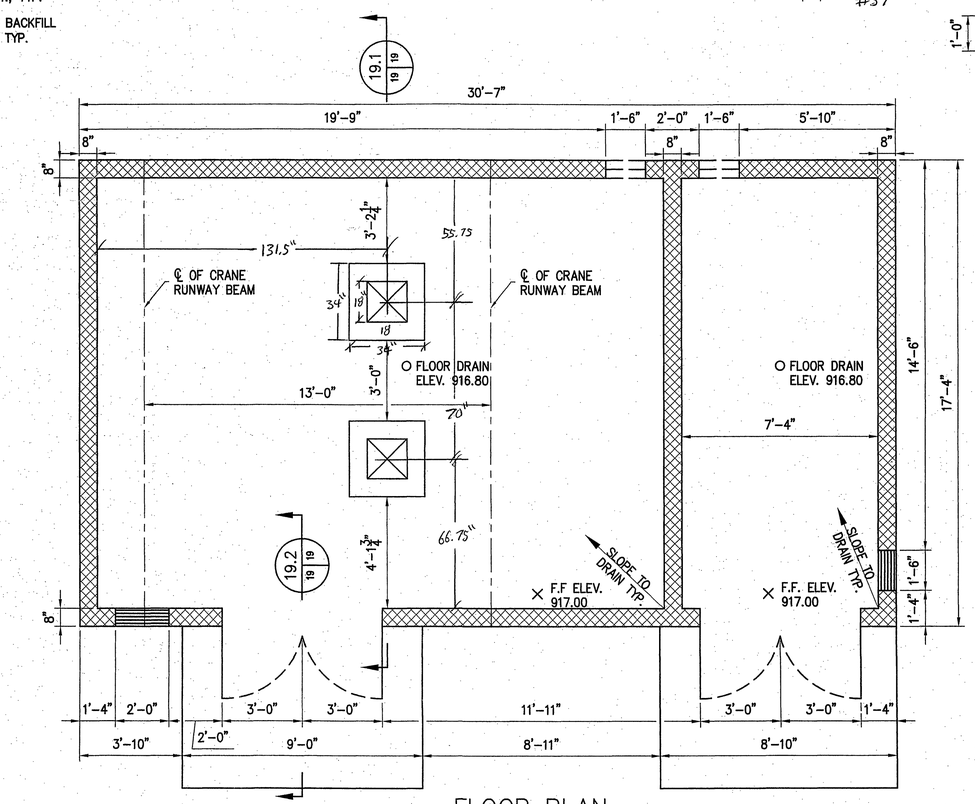

FLOOR PLAN
3/8" = 1'-0"

COMMONWEALTH OF VIRGINIA
4/4/11
CHAD M. THOMAS
Lic. No. 036862
PROFESSIONAL ENGINEER

Revisions	Date

Issue Date: Mar. 9, 2011
Drawn By: PFC
Designed By: PFC
Checked By: CMT
Date: Mar. 9, 2011

Mattern & Craig
CONSULTING ENGINEERS • SURVEYORS
701 FIRST STREET, S.W.
ROANOKE, VIRGINIA 24016
(540) 345-9342
FAX (540) 345-7691

MOUNT PLEASANT PUMP STATION & UTILITY RELOCATION

STRUCTURAL DETAIL

ROANOKE, VIRGINIA

Vertical Scale:

Horizontal Scale: AS NOTED

Commission Number: 2900K

Sheet No.: 19

V:\71741-Rt. 116 Roanoke\ru71741\Mount Pleasant Pump Station with exist conn.dwg, 3/8/2011 2:23