1. SETTER TO BE A Y. McDONALD T20-215WDD033, FORD VBHH72-15W-11-23 OR APPROVED EQUAL.
2. SADDLES MUST BE USED WITH ALL PLASTIC & DUCTILE IRON PIPE. SERVICE SADDLES SHALL BE USED IN ACCORDANCE WITH WATER DISTRIBUTION PIPING SPECIFICATION. SERVICE SADDLES FOR PLASTIC PIPE SHALL BE: POWERSEAL 3417, OR 3412AS, ROMAC 202S, OR 306, OR FORD METER FS202 OR FS203. FOR DUCTILE IRON PIPE USE THE ABOVE OR POWERSEAL 3413, ROMAC 202 OR FORD METER F202.
3. METER BOX SHALL BE CARSONMID-STATES PLASTICS, INC. PLASTIC BOX WITH FORD "A" DOMESTIC SERIES FRAME WITH A NICOR DOMESTIC 12.25 CX LID WITH SENSUS RECESS AND WVWA LOGO, ADS CORRUGATED HDPE BOX WITH FORD "A" DOMESTIC SERIES FRAME WITH A NICOR DOMESTIC 12.25 CX LID WITH SENSUS RECESS AND WVWA LOGO OR APPROVED EQUAL. METER BOX SHALL NOT BE PLACED IN AREAS SUBJECT TO VEHICULAR TRAFFIC. IF TRAFFIC BEARING BOX IS REQUIRED, DESIGN ENGINEER SHALL CONSULT WITH PARTICIPATING UTILITY TO DETERMINE SITE SPECIFIC REQUIREMENTS.
4. CORPORATION STOP SHALL BE FORD FB1000-4-GL-NL, MUELLER B-25008 OR APPROVED EQUAL.
5. SERVICE SHALL BE "K" TYPE COPPER, OR COPPER TUBE SIZE POLYETHYLENE (PE) 4710, SCDR-9 (200 psi).
6. WHENEVER SIDEWALK EXISTS OR IS PROPOSED, MODIFY METER LOCATION AS DIRECTED.

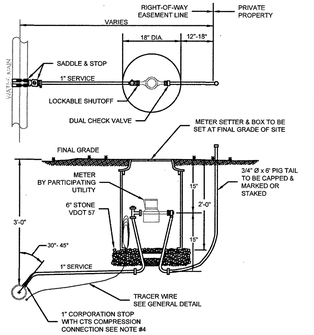


WESTERN VIRGINIA REGIONAL - CONSTRUCTION DETAIL

SINGLE RESIDENTIAL WATER SERVICE - (NEW DEVELOPMENT) (LINE PRESSURE UNDER 100 PSI) — W-1 — 09/07/17

1. FILTER FABRIC TO BE INSTALLED BETWEEN BOTTOM OF PIPE AND STONE BEDDING. FABRIC TO EXTEND VERTICALLY A MINIMUM OF 6" FROM BOTTOM OF VAULT (FULL CIRCUMFERENCE).

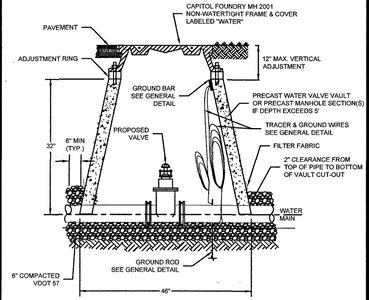


WESTERN VIRGINIA REGIONAL - CONSTRUCTION DETAIL

WATER LINE VALVE & VAULT — W-9 — 01/01/14

1. THE 2" PIPING AND "STREET EL" SHALL BE LEAD FREE BRASS OR DUCTILE IRON.
2. PIPE JOINTS SHALL BE RESTRAINED BEFORE GATE VALVE IN ACCORDANCE WITH DISTANCE SHOWN IN THE "MINIMUM THRUST RESTRAINT OF PIPE JOINTS DESIGN LENGTHS" DETAIL FOR VALVE / PLUG. PIPE JOINTS BETWEEN GATE VALVE AND BLOWOFF SHALL ALSO BE RESTRAINED.

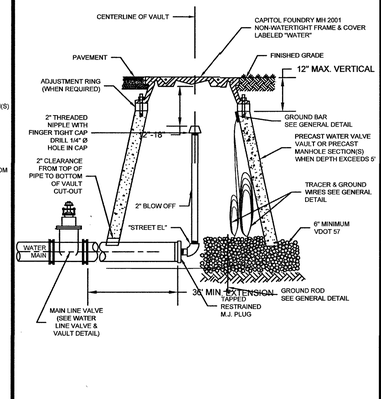


WESTERN VIRGINIA REGIONAL - CONSTRUCTION DETAIL

TEMPORARY END OF LINE BLOW-OFF ASSEMBLY — W-11 — 01/01/14

1. SEE RESIDENTIAL WATER SERVICE DETAIL FOR SADDLE REQUIREMENTS.
2. LARGER COMBINATION VALVE MAY BE REQUIRED DEPENDING ON APPLICATION.

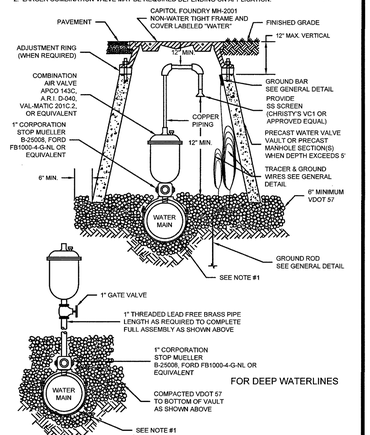


WESTERN VIRGINIA REGIONAL - CONSTRUCTION DETAIL

COMBINATION AIR VALVE ASSEMBLY — W-13 — 02/10/15

1. USE MODERATELY STIFF MIX OF NON SHRINK GROUT, SAND, AND 1/2" AND LESS DIAMETER GRAVEL WITH 28 DAYS. STRENGTH AT MINIMUM 3,000 P.S.I.
2. MIX IS TO BE FORCED INTO ALL GROOVES AND UNDER FLANGE OF FRAME AND LIP T AT OR ABOVE TOP OF FLANGE.
3. DO NOT BACKFILL AROUND FRAME AND COVER, FOR 48 HOURS AFTER CONCRETE IS PLACED. THE USE OF HIGH EARLY STRENGTH CEMENT WOULD REDUCE TIME TO 24 HRS.
4. RESTRICT TRAFFIC LOAD FOR A MINIMUM OF 24 HOURS.

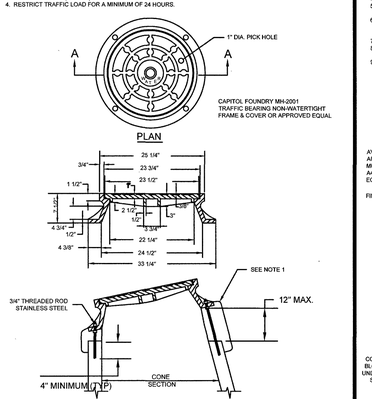


WESTERN VIRGINIA REGIONAL - CONSTRUCTION DETAIL

VAULT FRAME AND COVER — W-16 — 01/01/14

1. PUBLIC HYDRANTS SHALL BE PAINTED SILVER WITH AN OIL-BASED PAINT. PRIVATE HYDRANTS SHALL ALSO BE PAINTED SILVER WITH AN OIL-BASED PAINT UNLESS OTHERWISE SPECIFIED BY THE JURISDICTIONAL FIRE MARSHALL.
2. FIRE HYDRANT SHALL BE INSTALLED 2' MIN. AND 4' MAX. FROM BACK OF CURB OR 6' MIN. AND 12' MAX. FROM EDGE OF PAVEMENT WHEN CURB IS NOT PRESENT. FIRE HYDRANT TO BE INSTALLED WITHIN RIGHT-OF-WAY OR EASEMENT LINE.
3. AREA AROUND HYDRANT AT A RADIUS OF 4' TO BE LEVEL AND UNOBSTRUCTED.
4. WATERPROOF BAGS OR OUT OF SERVICE RINGS SHALL BE PLACED OVER ALL NEWLY INSTALLED FIRE HYDRANTS.
5. HYDRANT ASSEMBLIES SHALL BE RODDED AND RESTRAINED WITH APPROVED M.J. GLAND RESTRAINTS. HIGH PRESSURE (OVER 150 PSI) ALSO REQUIRES CONCRETE THRUST BLOCKS AS SHOWN BELOW.
6. IF DURING CONSTRUCTION THE SEASONAL WATER LEVEL IS NOTED TO BE ABOVE THE DRAIN OUTLETS OF THE PROPOSED HYDRANT, THE PARTICIPATING UTILITY WILL BE NOTIFIED IMMEDIATELY SO THAT THE HYDRANT CAN BE RELOCATED TO A SUITABLE LOCATION. OMITTED, OR THE DRAIN HOLE PLUGGED.
7. TWO WRAPS OF TRACER WIRE SHALL BE WRAPPED AROUND BASE OF HYDRANT.
8. APPROVED MODELS - AVK MODEL 27B0, AFC MODEL B-84-B-5, MUELLER CENTURION A423, KENNEDY K81D OR EQUIVALENT.
9. WHERE HYDRANT LATERAL(S) IS APPROVED BY THE PARTICIPATING UTILITY TO BE LONGER IN LENGTH, MAKING THE CONTINUOUS SECTION OF PIPE ON EACH SIDE OF THE GATE VALVE UNFEASIBLE, RESTRAINED PIPE JOINTS SHALL BE INSTALLED BETWEEN THE TEE AND GATE VALVE IN LIEU OF RODDING. HOWEVER, A RODDED CONTINUOUS SECTION OF PIPE SHALL ALWAYS BE INSTALLED BETWEEN THE GATE VALVE AND HYDRANT.

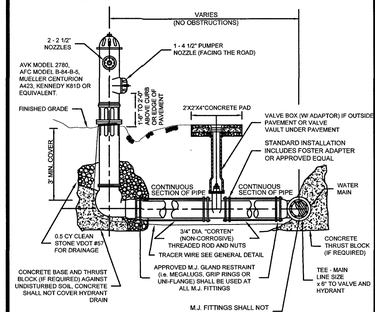


WESTERN VIRGINIA REGIONAL - CONSTRUCTION DETAIL

FIRE HYDRANT ASSEMBLY — W-17 — 02/10/15

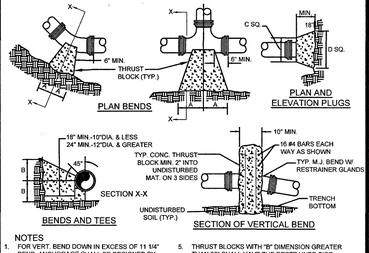


NOTES

1. FOR VERT. BEND DOWN IN EXCESS OF 11 1/4° BEND, ANCHORAGE SHALL BE DESIGNED BY ENGINEER.
2. FOR VERT. BEND UPWARD, BLOCKING TO BE SIMILAR TO THAT FOR HORZ. BEND.
3. GLANDS & BOLTS SHALL BE PROTECTED FROM CONC. WITH PLASTIC SHEETING WHEN POURING THRUST BLOCKS.
4. ALL THRUST BLOCK & SUPPORT CONCRETE SHALL BE 3000 PSI READY MIX CONCRETE.
5. THRUST BLOCKS WITH "B" DIMENSION GREATER THAN 30" SHALL HAVE THE RESTRAINED PIPE INSTALLED WITH A MINIMUM OF 4' OF COVER.
6. IF UNDER 100 PSI WORKING PRESSURE, RESTRAINED JOINTS MUST BE USED. IF EQUAL OR GREATER THAN 100 PSI, BOTH THRUST BLOCK AND RESTRAINED JOINTS ARE REQUIRED.
7. WHEN THRUST BLOCK IS REQUIRED BUT NOT FEASIBLE TO CONSTRUCT, THRUST COLLAR SHALL BE USED. SEE THRUST COLLAR DETAIL.

PRESSURE = 200psi
BEARING = 2000psf
FACTOR OF SAFETY = 1.5

| PIPE SIZE | 90° BEND | | 45° BEND | | 22 1/2° BEND | | 11 1/4° BEND | | TEE | | PLUG | |
|---|---|---|---|---|---|---|---|---|---|---|---|---|
| | A | B | A | B | A | B | A | B | A | B | C | D |
| 4" | 8" | 12" | 8" | 8" | 6" | 6" | 6" | 6" | 11" | 6" | 10" | 6" |
| 6" | 18" | 12" | 8" | 10" | 8" | 8" | 8" | 8" | 11" | 10" | 12" | 18" |
| 8" | 18" | 13" | 10" | 10" | 8" | 8" | 8" | 8" | 11" | 12" | 12" | 24" |
| 10" | 20" | 16" | 12" | 14" | 8" | 12" | 8" | 12" | 14" | 16" | 16" | 30" |
| 12" | 20" | 16" | 12" | 14" | 8" | 12" | 8" | 12" | 14" | 16" | 16" | 30" |
| 16" | 26" | 22" | 16" | 18" | 11" | 13" | 11" | 13" | 18" | 20" | 20" | 36" |
| 24" | 65" | 42" | 65" | 30" | 44" | 22" | 22" | 16" | 82" | 42" | 82" | 42" |
| 30" | 185" | 42" | 100" | 42" | 52" | 42" | 42" | 30" | 185" | 42" | 185" | 42" |

WESTERN VIRGINIA REGIONAL - CONSTRUCTION DETAIL

THRUST BLOCK REQUIREMENTS — W-18 — 01/01/14

FACTOR OF SAFETY = 1.5

| PIPE SIZE | PIPE MAT'L | 90° BEND | 45° BEND | 22 1/2° BEND | 11 1/4° BEND | VALVE / PLUG ON TEE | TEE BRANCH ON TEE | REDUCER ON TEE 4) | 45° VERT. | 22 1/2° VERT. | 11 1/4° VERT. |
|---|---|---|---|---|---|---|---|---|---|---|---|
| 6" | D.I. | 26' | 21' | 6' | 3' | 50' | 25' | 26' | 21' | 10" | 5" |
| 8" | D.I. | 36' | 21' | 8' | 4' | 65' | 41' | 27' | 27' | 13" | 7" |
| 10" | D.I. | 43' | 21' | 9' | 5' | 77' | 53' | 26' | 32" | 16' | 8" |
| 12" | D.I. | 51' | 21' | 10' | 5' | 91' | 67" | 27' | 39" | 18" | 9" |
| 6" | PVC | 29' | 21' | 6' | 3' | 78' | 25' | 40' | 32" | 16' | 8" |
| 8" | PVC | 37' | 21' | 8' | 4' | 102" | 49' | 43' | 42" | 21' | 10' |
| 10" | PVC | 44' | 21' | 9' | 5' | 122" | 68' | 41' | 51' | 25' | 12" |
| 12" | PVC | 51' | 21' | 11' | 6' | 143' | 89' | 42" | 60' | 29' | 15' |

1. ALL JOINTS SHALL BE RESTRAINED ON BOTH SIDES OF THE FITTING AND DOCUMENTED BY THE INSPECTOR FOR THE LENGTH SHOWN UNLESS OTHERWISE INDICATED.
2. RESTRAINED LENGTH SHOWN REFERS TO ANY DESIGNED OR POTENTIAL LINE STOP, INCLUDING ALL GATE VALVES.
3. RESTRAINED LENGTH SHOWN REFERS TO THE BRANCH LINE ONLY. THE CONTINUOUS PIPE LENGTH OF THE MAIN RUN SHALL BE A MINIMUM OF 10' ON EACH SIDE OF THE TEE.
4. RESTRAINED LENGTH SHOWN IS BASED ON REDUCING PIPE DIAMETER TO ONE SIZE SMALLER THAN PIPE LISTED (ANY OTHER DIAMETER REDUCTION WILL REQUIRE ADDITIONAL CALCULATIONS BEFORE INSTALLATION). RESTRAINED LENGTH SHOWN IS UPSTREAM ON THE LARGE SIDE OF THE REDUCER.
5. 12" AND SMALLER DIAMETER: IF UNDER 150 PSI WORKING PRESSURE, RESTRAINED JOINT(S) ARE TO BE USED. IF EQUAL TO OR OVER 150 PSI WORKING PRESSURE, BOTH THRUST BLOCK(S) AND RESTRAINED JOINT(S) SHALL BE USED.

   LARGER THAN 12" DIAMETER: IF UNDER 100 PSI WORKING PRESSURE, RESTRAINED JOINT(S) ARE TO BE USED. IF EQUAL TO OR OVER 100 PSI WORKING PRESSURE, BOTH THRUST BLOCK(S) AND RESTRAINED JOINT(S) SHALL BE USED (UNLESS OTHERWISE APPROVED BY THE PARTICIPATING UTILITY).
6. FOR RESTRAINED JOINT PIPING REQUIREMENTS AT FITTING R.J. PVC AND R.J. DIP MAY BE USED INTERCHANGEABLY WITH APPROVAL FROM PARTICIPATING UTILITY. CONTRACTOR MUST PLAN ACCORDINGLY FOR THE DIFFERENCE IN PVC AND DIP BELL AND SPIGOT DIMENSIONS.

WESTERN VIRGINIA REGIONAL - CONSTRUCTION DETAIL

MINIMUM THRUST RESTRAINT OF PIPE JOINTS DESIGN LENGTHS — W-19 — 02/10/15

INSTALLATION OF DUCTILE IRON WATER MAINS
TABLE 3 AWWA C600-05
Maximum Joint Deflection Full Length of Pipe - Push on Type Joint

| Nominal Pipe Size (inches) | Deflection Angle - θ (degree) | Maximum Offset - S* (inches) Joint Length 18-Feet | Joint Length 20-Feet | Approximate Radius of Curve - R* Produced by Succession of Joints Joint Length 18-Feet | Joint Length 20-Feet |
|---|---|---|---|---|---|
| 3 | 5° | 19 | 21 | 205 | 230 |
| 4 | 5° | 19 | 21 | 205 | 230 |
| 6 | 5° | 19 | 21 | 205 | 230 |
| 8 | 5° | 19 | 21 | 205 | 230 |
| 10 | 5° | 19 | 21 | 205 | 230 |
| 12 | 5° | 19 | 21 | 205 | 230 |
| 14 | 3° | 11 | 12 | 340 | 380 |
| 16 | 3° | 11 | 12 | 340 | 380 |
| 18 | 3° | 11 | 12 | 340 | 380 |
| 20 | 3° | 11 | 12 | 340 | 380 |
| 24 | 3° | 11 | 12 | 340 | 380 |
| 30 | 3° | 11 | 12 | 340 | 380 |

* SEE FIGURE 4.
For 14-inch and larger push-on joints, maximum deflection angle may be larger than shown above. Consult the manufacturer.

INSTALLATION OF DUCTILE IRON WATER MAINS
TABLE 4 AWWA C600-05
Maximum Joint Deflection Full Length of Pipe - Mechanical Joint Pipe

| Nominal Pipe Size (inches) | Deflection Angle - θ (degree) | Maximum Offset - S* (inches) Joint Length 18-Feet | Joint Length 20-Feet | Approximate Radius of Curve - R* Produced by Succession of Joints Joint Length 18-Feet | Joint Length 20-Feet |
|---|---|---|---|---|---|
| 3 | 8°-18" | 31 | 35 | 125 | 140 |
| 4 | 8°-18" | 31 | 35 | 125 | 140 |
| 6 | 7°-07" | 27 | 30 | 145 | 160 |
| 8 | 6°-21" | 20 | 22 | 195 | 220 |
| 10 | 5°-21" | 20 | 22 | 195 | 220 |
| 12 | 5°-21" | 20 | 22 | 195 | 220 |
| 14 | 3°-35" | 13.5 | 15 | 285 | 320 |
| 16 | 3°-35" | 13.5 | 15 | 285 | 320 |
| 18 | 3°-00" | 11 | 12 | 340 | 380 |
| 20 | 3°-00" | 11 | 12 | 340 | 380 |
| 24 | 2°-23" | 9 | 10 | 450 | 500 |

* SEE FIGURE 4.




FIGURE 4

WESTERN VIRGINIA REGIONAL - CONSTRUCTION DETAIL

DUCTILE IRON PIPE DEFLECTION ALLOWANCE TABLES — W-22 — 01/01/14

1. A 1" DRAIN WILL BE REQUIRED ON THE LOWER END OF THE CASING PIPE.
2. SPACERS SHALL BE RACI HDPE SPACERS OR EQUIVALENT. STAINLESS STEEL SPACERS MAY BE USED IF IN COMPLIANCE WITH THE FOLLOWING CRITERIA:
   - INTERIOR SURFACES OF THE CIRCULAR STAINLESS STEEL BAND SHALL BE LINED WITH EPDM OR NEOPRENE MATERIAL.
   - ABRASION RESISTANT RUNNERS/SKIDS SHALL BE POLYMER MATERIAL WITH EACH END BEVELED TO FACILITATE EASE OF INSTALLATION INTO CASING PIPE.
3. SPACERS SHALL BE SPACED 6 1/2' ON SEWER PIPE.
4. CARRIER PIPE SHALL BE DUCTILE OR HDPE IN ACCORDANCE WITH REGIONAL STANDARDS.
5. IF HDPE CARRIER PIPE IS USED AND PRECISE GRADES ARE NOT REQUIRED THROUGH CASING, SPACERS MAY BE OMITTED.
6. CASING PIPE TO BE STEEL IN ACCORDANCE WITH VDOT STANDARD DETAIL EP-1. OR HDPE AS SPECIFIED IN THE STANDARDS IF APPROVED BY THE PARTICIPATING UTILITY.
7. CONCRETE CASING PIPE WILL NOT BE ALLOWED.
8. DIAMETER OF CASING PIPE SHALL BE AS SHOWN IN THE TABLE BELOW UNLESS OTHERWISE SPECIFIED BY THE PARTICIPATING UTILITY. WHERE SPACERS ARE NOT REQUIRED, CASING PIPE SHALL BE MINIMUM DIAMETER TO ADEQUATELY INSTALL AND PASS CARRIER PIPE THROUGH AND TO MINIMIZE VOID SPACE BETWEEN CARRIER AND CASING PIPES.

| CASING PIPE SIZE CHART | |
|---|---|
| CARRIER PIPE (NOMINAL DIAMETER) | CASING PIPE (DIAMETER) |
| 6" | 12" |
| 8" | 16" |
| 10" | 24" |
| 12" | 24" |
| 14" | 24" |
| 16" | 30" |
| 18" | 30" |
| 24" | 42" |
| 30" | 42" |

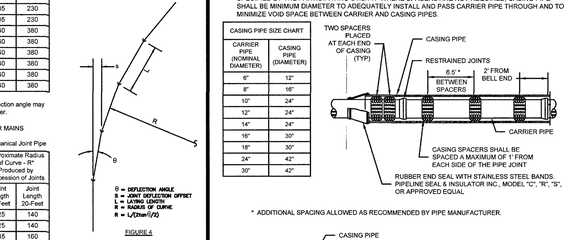


* ADDITIONAL SPACING ALLOWED AS RECOMMENDED BY PIPE MANUFACTURER.

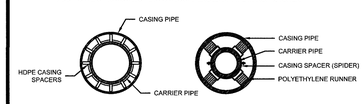


WESTERN VIRGINIA REGIONAL - CONSTRUCTION DETAIL

PIPE SUPPORT IN CASING PIPE — G-6 — 05/05/15

1. ALL WATER FACILITIES SHALL BE INSTALLED ACCORDING TO THE WESTERN VIRGINIA WATER AUTHORITY (WVWA) DESIGN AND CONSTRUCTION STANDARDS (LATEST REVISION).
2. ALL DRIVEWAYS, CULVERTS & MAILBOXES MUST BE RESTORED TO EXISTING CONDITIONS AFTER CONSTRUCTION IS COMPLETED. ANY CHANGES TO EXISTING CONDITIONS MUST BE APPROVED BY WVWA.
3. ALL CONNECTIONS TO EXISTING WATER MAINS SHALL BE COORDINATED WITH THE WVWA.
4. A MINIMUM COVER OF 3 FEET IS REQUIRED OVER PROPOSED LINES, EXCEPT WHERE SHOWN.
5. CONTRACTOR SHALL BE RESPONSIBLE FOR LOCATING AND UNCOVERING VALVE VAULTS AFTER PAVING AND ADJUSTMENT TO FINAL GRADE IF NECESSARY.
6. ALL EXISTING UTILITIES MAY NOT BE SHOWN IN THE EXACT LOCATION. THE CONTRACTOR SHALL COMPLY WITH THE STATE WATER WORKS REGULATIONS WHERE LINES CROSS.
7. ALL EXCAVATION, BACKFILL AND PAVEMENT REPLACEMENT IN THE VDOT RIGHT OF WAY SHALL BE REPLACED IN ACCORDANCE WITH THE LUP-SP & LUP-OC PROVISIONS.
8. ALL TRENCHES IN EXISTING RIGHT OF WAYS SHALL BE COMPACTED ACCORDING TO VDOT STANDARDS.
9. ALL WATER MAINS SHALL BE DUCTILE IRON IN ACCORDANCE WITH AWWA EXCEPT THROUGH BORED SECTIONS, WHICH MAY BE DR-11 HDPE.
10. ALL PAVEMENT CUTS SHALL BE SAW CUT AND EDGES TACK COATED PRIOR TO PAVING.
11. THE CONTRACTOR SHALL FLUSH AND DISINFECT IN ACCORDANCE WITH AWWA SPECIFICATION C651, LATEST REVISION.


WESTERN VIRGINIA WATER AUTHORITY
ENGINEERING SERVICES
601 S JEFFERSON ST, SUITE 300
ROANOKE, VA 24011
540-853-5770


COMMONWEALTH OF VIRGINIA
W. NICHOLAS ROBERTSON
Lic. No. 0402052204
9/24/17
PROFESSIONAL ENGINEER

# RUTROUGH ROAD WATER & SEWER EXTENSION PHASE 2

## WATER DETAILS

| Rev | Description | Date | By |
|---|---|---|---|
| | | | |

Designed: AAS
Drawn: AAS
Checked: WNR
Approved:
Date: 9/24/17
Project: