1. FOR 6" FIRE LINE, EXTERIOR VAULT DIMENSIONS SHALL BE (L x W x H) 6' X 6' X 5' WITH DOMESTIC TAP MADE INSIDE VAULT AS SHOWN BELOW.
2. FOR 8" FIRE LINE EXTERIOR VAULT DIMENSIONS SHALL BE (L X W X H) 6' X 6' X 6' WITH DOMESTIC TAP MADE OUTSIDE VAULT. BALL VALVE WITH LOCKING TABS SHALL BE PROVIDED INSIDE VAULT TO ALLOW FOR ISOLATION OF DOMESTIC METER.
3. SINGLE DETECTOR CHECK VALVE SHALL BE WILKINS 310 DALM , WATTS ES-S807F - BP, OR APPROVED EQUAL WITH FLANGED END CONNECTIONS, BYPASS ASSEMBLY, AND ONE OS&Y GATE VALVE.
4. BYPASS ASSEMBLY SHALL INCLUDE 2 BALL VALVES TO ISOLATE METER.
5. DOMESTIC SHALL BE TYPE K COPPER WITH GRIP JOINT FITTINGS, BALL VALVE AT TAPPING SADDLE (WITH LOCKING TABS) AND CHECK VALVE ON OUTLET.
6. DOMESTIC METER AND BYPASS METER TO BE SUPPLIED BY OWNER AND INSTALLED BY VENDOR.
7. "UNI FI FANGE" ADAPTOR FLANGE, OR APPROVED EQUAL, OR FLANGED - PLAIN END PIPING REQUIRED FOR INLET AND OUTLET PIPING.
8. VAULT TO BE INSTALLED ON MIN. 6" COMPACTED VDOT #57 STONE WITH FILTER FABRIC PLACED BETWEEN BOTTOM OF VAULT AND STONE BEDDING. FILTER FABRIC TO EXTEND VERTICALLY A MINIMUM OF 6" ON ALL FOUR SIDES OF VAULT.

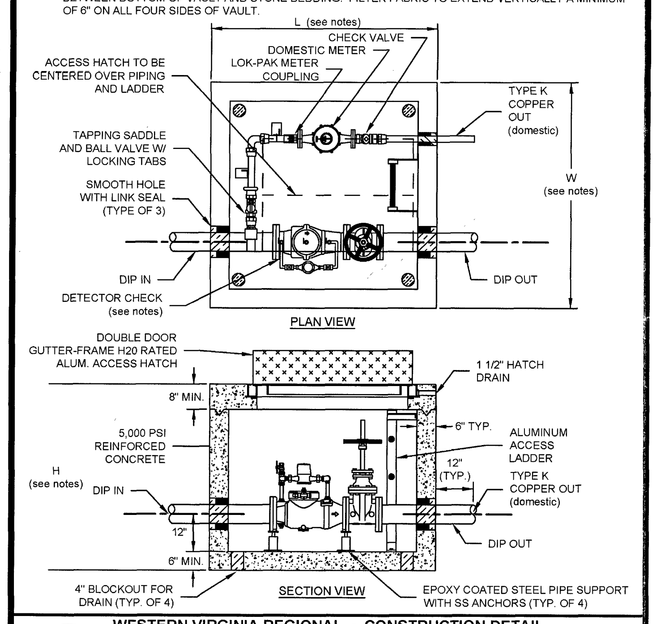

WESTERN VIRGINIA REGIONAL - CONSTRUCTION DETAIL

1 (C1.2 | C5.1) COMMERCIAL METER VAULT — 02/10/15 — W-7

1. BEDDING, HAUNCHING AND INITIAL BACKFILL CONSTRUCTION SHALL BE IN ACCORDANCE WITH THIS DETAIL AND MANUFACTURER'S RECOMMENDATION.
2. ALL PVC PIPE SHALL BE BEDDED IN COMPACTED VDOT #57 OR #68 STONE.
3. IN VDOT ROW, THE CONTRACTOR SHALL REPLACE THE PAVEMENT AS REQUIRED AND SPECIFIED BY VDOT. IN ROANOKE CITY, CONTRACTOR SHALL REPLACE PAVEMENT AS REQUIRED BY CITY OF ROANOKE RIGHT OF WAY EXCAVATION AND RESTORATION STANDARDS, LATEST EDITION.
4. ALL CONSTRUCTION WITHIN THE PUBLIC RIGHT-OF-WAY SHALL BE AS SPECIFIED BY VDOT OR APPLICABLE LOCALITY.
5. PRIOR TO CONSTRUCTION, CONTRACTOR IS RESPONSIBLE FOR SECURING ALL REQUIRED PERMITS FROM VDOT AND/OR APPLICABLE LOCALITY.
6. IN AREAS SUBJECTED TO VEHICULAR TRAFFIC, BEDDING STONE AND FILL SHALL BE PLACED IN 6" LIFTS AND SHALL BE COMPACTED TO AT LEAST 95% OF MAXIMUM DENSITY AS DETERMINED BY ASTM D 698.
7. ALL SEWER LINE PIPE SHALL BE BEDDED IN COMPACTED GRANULAR MATERIAL. BEDDING REQUIREMENTS FOR DUCTILE SEWER LINE ARE DEPENDENT ON MANUFACTURER'S BEDDING CRITERIA
8. BENCH CUT ON EACH SIDE OF PAVEMENT SHALL BE IN ACCORDANCE WITH VDOT OR APPLICABLE LOCALITY'S SPECIFICATIONS.
9. ALL EXCAVATIONS SHALL COMPLY WITH OSHA TECHNICAL MANUAL, CHAPTER 2, TITLED "EXCAVATIONS: HAZARD RECOGNITION IN TRENCHING AND SHORING."
10. THE TRACER WIRE SHALL BE PLACED ALONG THE LOWER QUADRANT OF THE PIPE. THE WIRE SHALL NOT TOUCH THE PIPE, BUT SHALL BE A MAXIMUM OF 6" FROM THE PIPE. NON-METALLIC SPACERS MAY BE USED TO MAINTAIN A SET DISTANCE FROM THE UTILITY.

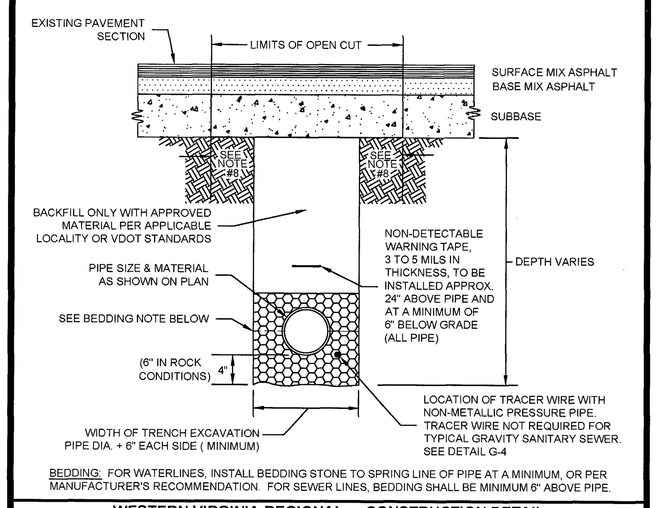

BEDDING: FOR WATERLINES, INSTALL BEDDING STONE TO SPRING LINE OF PIPE AT A MINIMUM, OR PER MANUFACTURER'S RECOMMENDATION. FOR SEWER LINES, BEDDING SHALL BE MINIMUM 6" ABOVE PIPE.

WESTERN VIRGINIA REGIONAL - CONSTRUCTION DETAIL

2 (C1.2 | C5.1) BEDDING AND BACKFILL UNDER PAVEMENT AND IN RIGHT-OF-WAY — 08/01/15 — G-12

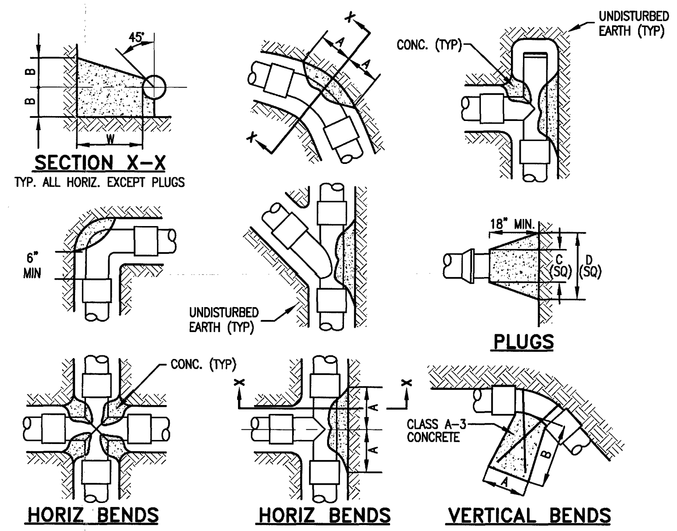

SIZE	1/4 BENDS			1/8 BENDS			1/16 BENDS			TEES			PLUGS	VERTICAL		
	A	B	W	A	B	W	A	B	W	A	B	W	C	D	A	B	W
≤6"	20"	12"	18"	11"	12"	18"	7"	10"	18"	12"	15"	18"	10"	27"	12"	30"	18"
8"	27"	16"	18"	15"	16"	18"	10"	12"	18"	16"	19"	18"	12"	35"	16"	30"	18"
10"	30"	22"	18"	18"	21"	18"	12"	16"	18"	20"	24"	18"	14"	44"	18"	30"	18"
12"	35"	28"	24"	20"	26"	24"	14"	19"	24"	23"	30"	24"	16"	52"	18"	30"	24"
14"	43"	31"	24"	24"	30"	24"	16"	24"	24"	28"	33"	24"	18"	61"	24"	36"	24"
16"	48"	36"	24"	27"	35"	24"	17"	28"	24"	32"	38"	24"	20"	70"	24"	36"	24"

NOTES:
1. CONCRETE SHALL BE VDOT STD CLASS A3 3000 PSI, AIR ENTRAINED.
2. CONCRETE SHALL NOT ENGAGE M.J. PIPE FASTENINGS OR GLANDS AT JOINTS.
3. CONCRETE SHALL NOT BE PLACED ON JOINTS, LIMITING FLEXIBILITY.
4. THRUST BLOCKS FOR VERT. BENDS SHALL BE THE SAME AS FOR HOR. BENDS, EXCEPT SYMETRICAL BENEATH PIPE.
5. EDGES OF THRUST BLOCKS SHALL BE AT PLUS AND MINUS 55 DEGREES TO PIPE CENTERLINE IN THE VERTICAL.
6. FOR VERTICAL BEND FITTINGS ≤12" USE 2-#6 RODS, 14"-24" FITTINGS USE 2-#8 RODS. RODS SHALL BE GALV. AND EMBEDDED IN CONC.

3 (C1.2 | C5.1) THRUST BLOCK DETAIL
NO SCALE

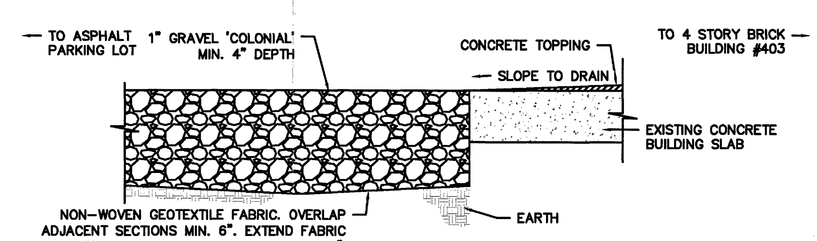

9 (C1.3 | C5.1) PERVIOUS DRAINAGE SECTION
NO SCALE

1. TAPPING SLEEVE SHALL BE POWERSEAL MODEL 3490 TYPE 304 STAINLESS STEEL WITH CARBON STEEL FLANGE, ROMA'S MODEL SST III, FORD MODEL FTSS WITH CARBON STEEL FLANGE OR APPROVED EQUIVALENT. SLEEVE SHALL BE RATED AT 100 PSI OVER WORKING PRESSURE AND MUST HAVE A TEST PLUG.
2. TAPPING VALVE SHALL BE AVK RESILIENT SEATED GATE VALVE SERIES 25 MJ/FL, MUELLER T-2360 RESILIENT WEDGE TAPPING VALVE WITH MJ/FL OR AFC SERIES 2500 RESILIENT WEDGE TAPPING VALVE WITH MJ/FL. VALVE SHALL BE RATED AT 250 PSI.
3. TAPPING SLEEVE AND VALVE SHALL BE FULL PORT TO ACCEPT FULL SIZE SHELL CUTTER.
4. STEEL FLANGE SHALL MEET AWWA C207.
5. SIZE-ON-SIZE TAPPING NOT ALLOWED UNLESS APPROVED BY PARTICIPATING UTILITY.

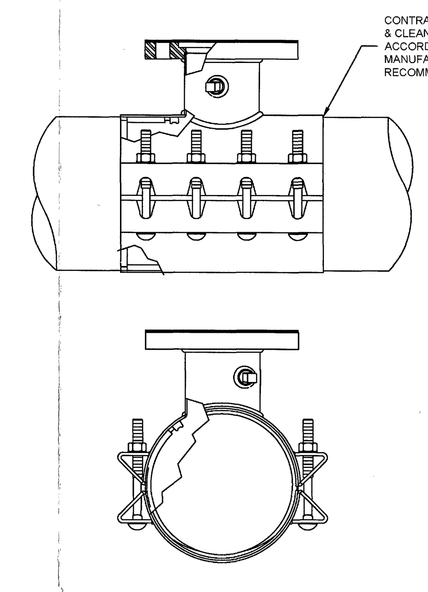

WESTERN VIRGINIA REGIONAL - CONSTRUCTION DETAIL

TAPPING SLEEVE AND VALVE — 01/01/14 — W-21

11 (C1.2 | C5.1)

12 (C1.2 | C5.1) NOT USED

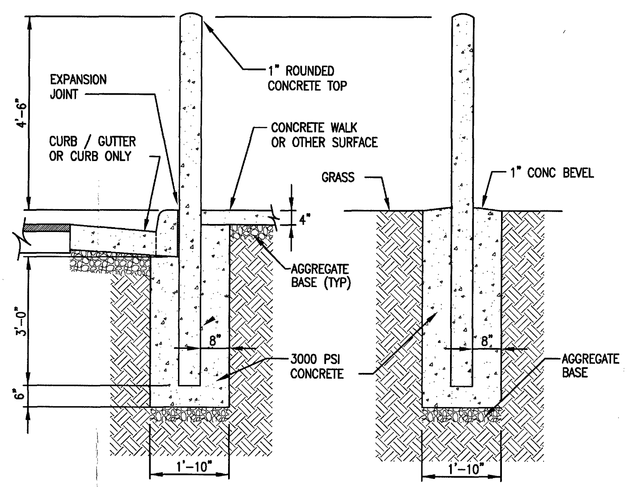

4 (C1.2 | C5.1) TRAFFIC BOLLARD DETAIL (6" DIA)
SCALE: 1/2"=1'-0"

NOTE:
6" DIAMETER SCH 40 STEEL PIPE BOLLARD FILLED WITH 3000 PSI CONCRETE. PAINT WITH RUST PROHIBITIVE PRIMER AND ENAMEL. PAINT CONCRETE ❶ TOP, DON'T PAINT ❶ BASE

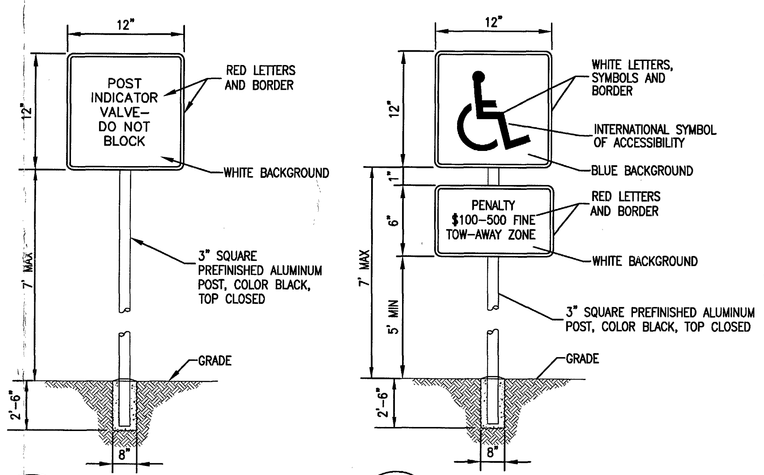

5 (C1.2 | C5.1) PIV SIGN
NO SCALE

6 (C1.3 | C5.1) HANDICAPPED PARKING SIGN
NO SCALE

12" X 18" VAN ACCESSIBLE SIGN WHERE ADJACENT TO 8' OR GREATER AISLE

1. TRAFFIC BEARING BOX AND LID REQUIRED IN TRAFFIC AREAS (CAPITOL FOUNDRY VB-9"S).
2. SEWER LATERAL AND CLEANOUT PIPING SHALL BE ASTM D3034 SDR 26. SEWER LATERAL FITTINGS SHALL BE OF SAME SDR RATING AS THE SEWER MAIN. SCHEDULE 40 SOLVENT WELD PIPE AND FITTINGS MAY BE USED FOR THE SEWER LATERAL AND CLEANOUT ASSEMBLY WITH APPROVAL FROM THE PARTICIPATING UTILITY.
3. ALL PIPE SHALL BE OF SAME SIZE.
4. NO BENDS ARE ALLOWED IN THE LATERAL FROM THE MAIN TO THE CLEANOUT STACK WYE. (EXCEPT FOR DEEP SEWER, AS SHOWN BELOW).
5. ALL MAIN LINE TAPS ON ACTIVE MAINS SHALL BE PERFORMED BY PARTICIPATING UTILITY.
6. PIPING ON PRIVATE SIDE OF CLEANOUT TO BE INSTALLED PER GOVERNING JURISDICTION REQUIREMENTS.
7. MINIMUM LATERAL SIZE: 4" FOR RESIDENTIAL SERVICE, 6" FOR NON-RESIDENTIAL SERVICE.
8. SEWER CLEANOUTS SHALL BE SAME SIZE AS SEWER LATERAL.
9. MINIMUM COVER FOR ALL SEWER LATERALS SHALL BE THREE (3') FEET.
10. PROPERTY OWNER RESPONSIBLE FOR INSTALLING CLEANOUT ON PROPERTY LINE (IN ACCORDANCE WITH THIS DETAIL) WHEN MAINTENANCE OCCURS.
11. LOWEST SERVED FINISHED FLOOR ELEVATION SHALL BE A MINIMUM OF THREE FEET (3') ABOVE THE TOP OF THE MAIN AT THE POINT WHERE THE SERVICE LATERAL CONNECTS TO THE MAIN.
12. WHEN CONNECTING TO EXISTING LATERAL USE FERNCO FLEXIBLE COUPLING.

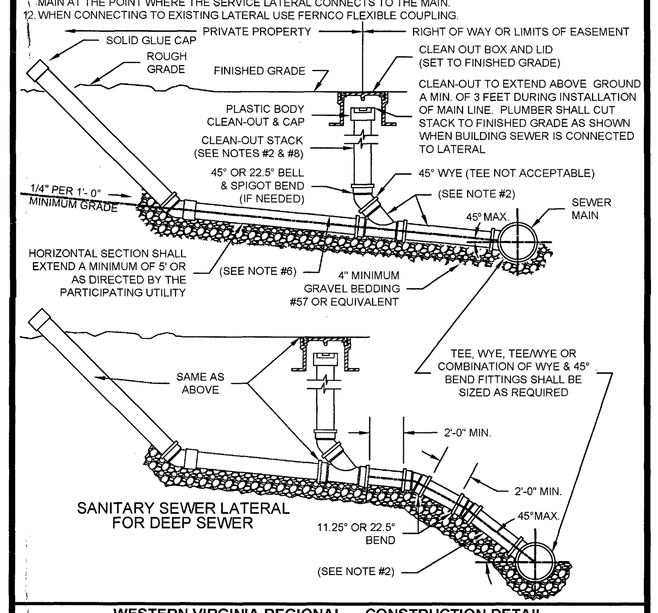

WESTERN VIRGINIA REGIONAL - CONSTRUCTION DETAIL

SANITARY SEWER LATERAL — 01/01/14 — S-6

10 (C1.2 | C5.1)

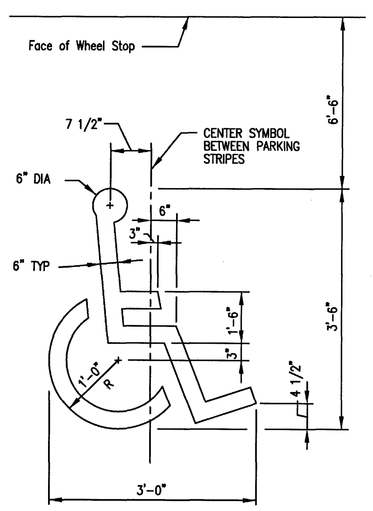

7 (C1.3 | C5.1) HANDICAPPED SYMBOL
NO SCALE

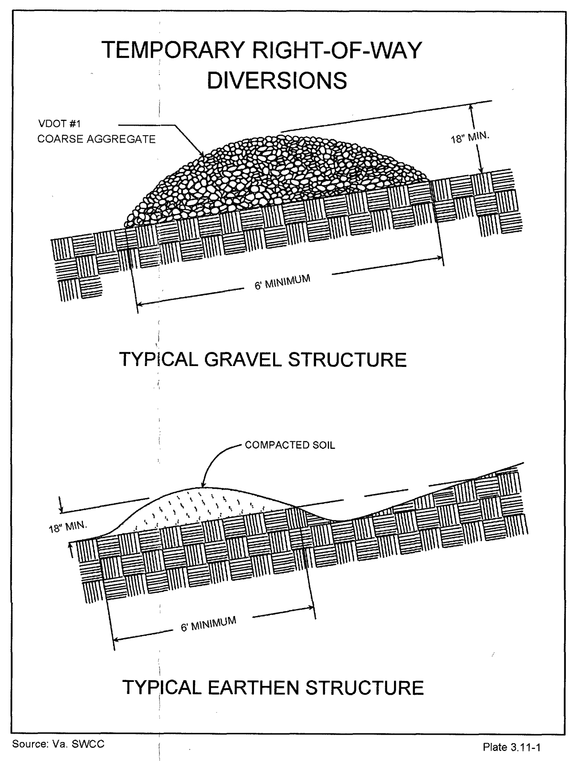

8 (C1.2 | C5.1) TEMPORARY RIGHT-OF-WAY DIVERSION
NO SCALE

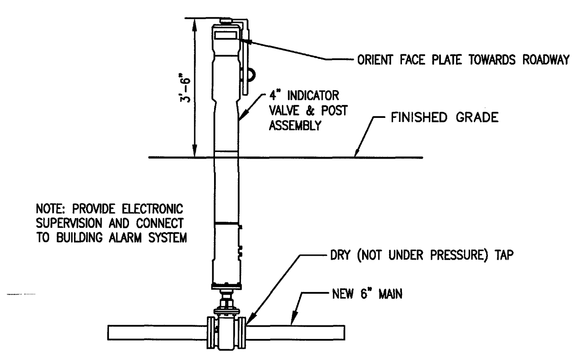

13 (C1.2 | C5.1) POST INDICATOR VALVE INSTALLATION
NO SCALE
NOTE: REFER TO SPECIFICATIONS FOR PROCEDURE AND NOTIFICATION FOR ANY INTERRUPTION IN WATER SERVICE.

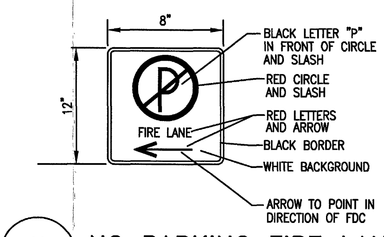

14 (C1.2 | C5.1) NO PARKING FIRE LANE SIGN
NO SCALE

APPROVED
SEP 22 2016

Baskervill
P.O. BOX 400, RICHMOND, VA 23218-0400

OWNER
403 SALEM LLC

PROJECT
2.140313.0
403 SALEM AVE

403 - 409 SALEM AVENUE SW
ROANOKE, VA 24016

SPECTRUM DESIGN
architects | engineers
10 CHURCH AVE SE PLAZA SUITE 1
ROANOKE, VIRGINIA 24011
PH 540.342.6001 FAX 540.342.6055

COMMONWEALTH OF VIRGINIA
MICHAEL A. RAKESTRAW
Lic. No. 28199
7/01/16
PROFESSIONAL ENGINEER

COPYRIGHT 2016 BASKERVILL USE OF THIS WORK IN WHOLE OR IN PART IS FORBIDDEN WITHOUT EXPRESSED WRITTEN CONSENT

ISSUE
7/1/16 - ISSUE FOR PERMIT

NUMBER	DATE	REVISIONS
1	7/25/16	ADDENDUM 1
2	8/25/16	ADDENDUM 2
3	9/16/16	ADDENDUM 3

DRAWING TITLE
CIVIL - DETAILS

DRAWING NO.
C5.1

J:\140313\Civil\140313 Civil Details.dwg 9/15/2016 2:09 PM Trae Lovick