1. SETTER TO BE A.Y. McDONALD #20-215 WDDD33 , FORD VBHH72-15W-1133 OR APPROVED EQUAL.
2. SADDLES MUST BE USED WITH ALL PLASTIC & CLASS 50 DUCTILE IRON PIPE. SERVICE SADDLES SHALL BE USED IN ACCORDANCE WITH SECTION 2695 OF THE WATER STANDARDS. SERVICE SADDLES FOR PLASTIC PIPE SHALL BE: POWERSEAL 3417, OR 3412AS, ROMAC 202S, OR 306, OR FORD METER FS202 OR FS303. FOR DUCTILE IRON PIPE USE THE ABOVE OR POWERSEAL 3413, ROMAC 202 OR FORD METER F202.
3. METER BOX MUST BE CARSON/MID-STATES-STATES PLASTICS, INC. PLASTIC BOX WITH FORD A32-T (ELECTRONIC READ LID) OR A. Y. McDONALD MODEL 74M32C-TC CAST IRON BASE & COVER OR APPROVED EQUAL. USE OF TRAFFIC BEARING BOX SHALL BE APPROVED BY THE AUTHORITY. TRAFFIC BEARING BOX SHALL BE CARSON/MID STATES PLASTICS H20 OR EQUIVALENT AND LID SHALL BE FORD METER BOX C32H OR EQUIVALENT.
4. WHENEVER SIDEWALK EXISTS OR IS PROPOSED, MODIFY METER LOCATION AS DIRECTED.
5. CORPORATION STOP MUST BE FORD F1000-4-G OR APPROVED EQUAL.

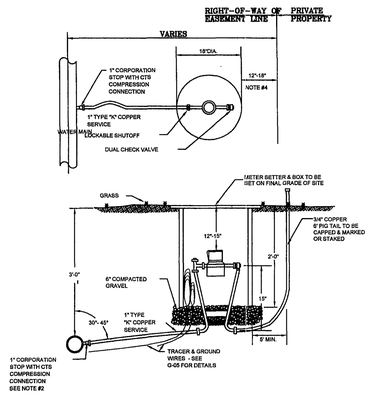

WESTERN VIRGINIA WATER AUTHORITY – CONSTRUCTION STANDARDS

REVISION	DATE		TYPE "A" SINGLE RESIDENTIAL WATER SERVICE (LINE PRESSURE UNDER 80 PSI)	W-01
	07/01/04			
	03/01/06			

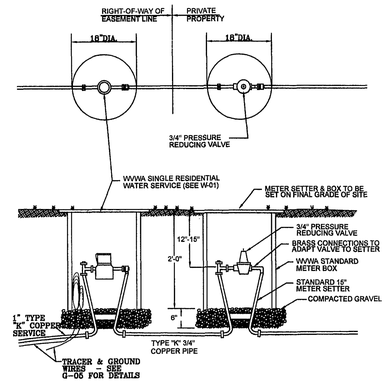

SEE W-01 NOTE #2 FOR SERVICE SADDLE DETAILS.

1. THIS CONFIGURATION REQUIRED WHEN WATER PRESSURE AT THE WATER MAIN IS BETWEEN 80 AND 120 PSI.

WESTERN VIRGINIA WATER AUTHORITY – CONSTRUCTION STANDARDS

REVISION	DATE		TYPE "B" SINGLE RESIDENTIAL WATER SERVICE (LINE PRESSURE UNDER 80 TO 120 PSI)	W-02
	07/01/04			
	03/01/06			

1. SETTER TO BE A.Y. McDONALD #20-215 WDDD33 , FORD VBHH72-15W-1133 OR APPROVED EQUAL.
2. METER BOX MUST BE CARSON/MID-STATES PLASTICS, INC. PLASTIC BOX WITH FORD A32-T (ELECTRONIC READ LID) OR A. Y. McDONALD MODEL 74M32C-TC CAST IRON BASE & COVER OR APPROVED EQUAL.
3. CORPORATION STOP MUST BE FORD F1000-4-6 OR APPROVED EQUAL.

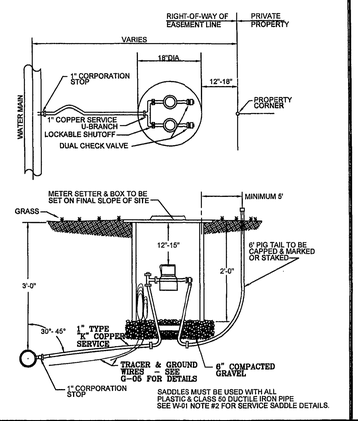

SADDLES MUST BE USED WITH ALL PLASTIC & CLASS 50 DUCTILE IRON PIPE SEE W-01 NOTE #2 FOR SERVICE SADDLE DETAILS.

WESTERN VIRGINIA WATER AUTHORITY – CONSTRUCTION STANDARDS

REVISION	DATE		DOUBLE RESIDENTIAL WATER SERVICE	W-04
	07/01/04			
	03/01/06			

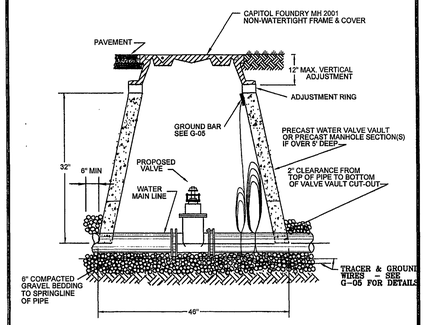

WESTERN VIRGINIA WATER AUTHORITY – CONSTRUCTION STANDARDS

REVISION	DATE		WATER LINE VALVE INSTALLATION	W-08
	07/01/04			
	03/01/06			

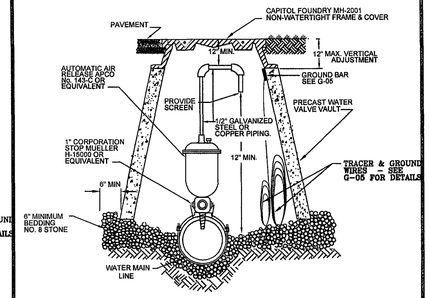

WESTERN VIRGINIA WATER AUTHORITY – CONSTRUCTION STANDARDS

REVISION	DATE		AUTOMATIC AIR RELEASE ASSEMBLY	W-12
	07/01/04			
	03/01/06			

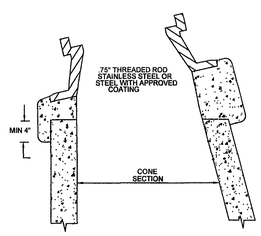

SECTION

NOTE:
1 USE MODERATELY STIFF MIX OF NON SHRINK CEMENT, SAND AND 1/2" AND 1/8" DIAMETER GRAVEL WITH 28 DAYS, STRENGTH AT 3,000 P.S.I.
2 MIX IS TO BE FORCED INTO ALL GROOVES AND UNDER FLANGE OF FRAME AND LEFT AT OR ABOVE TOP OF FLANGE.
3 MAX. OF 4 BRICK OR CONCRETE BLOCKS TO BE USED FOR GRADE CONTROL.
4 DO NOT BACKFILL AROUND FRAME AND COVER, FOR 48 HOURS AFTER CONI IS PLACED. THE USE OF HIGHEARLY STRENGTH CONCRETE WOULD REDUCE TIME TO (24HRS).
5 RESTRICT TRAFFIC LOAD FOR MIN. 24 HOURS.

WESTERN VIRGINIA WATER AUTHORITY – CONSTRUCTION STANDARDS

REVISION	DATE		INSTALLATION DETAIL FOR ALL FRAMES AND COVERS	W-16
	07/01/04			

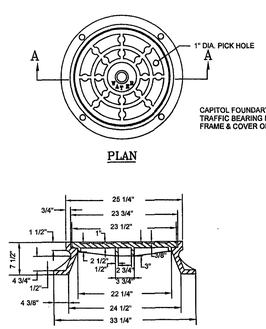

WESTERN VIRGINIA WATER AUTHORITY – CONSTRUCTION STANDARDS

REVISION	DATE		MANHOLE FRAME AND COVER	W-17
	07/01/04			

NOTES:
1. PUBLIC HYDRANTS SHALL BE PAINTED SILVER WITH AN OIL-BASED PAINT AND PRIVATE HYDRANTS SHALL BE PAINTED WHITE WITH AN OIL-BASED PAINT.
2. FIRE HYDRANT SHALL BE INSTALLED 2' MIN. AND 4' MAX. FROM BACK OF CURB OR 6' MIN. AND 12' MAX. WHEN CURB IS NOT PRESENT. FIRE HYDRANT TO BE INSTALLED WITHIN RIGHT-OF-WAY OR EASEMENT LINE.
3. AREA AROUND HYDRANT AT A RADIUS OF 4' TO BE LEVEL AND UNOBSTRUCTED.
4. WATERPROOF BAGS SHALL BE PLACED OVER ALL NEWLY INSTALLED FIRE HYDRANTS.
5. HIGH PRESSURE (OVER 120 PSI) REQUIRES THE USE ALL 3 RESTRAINTS.

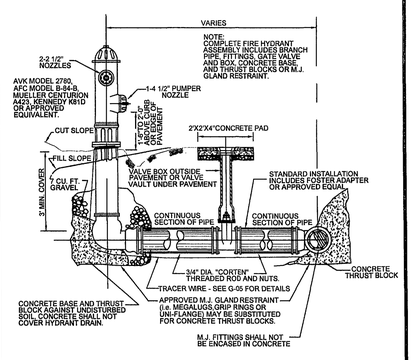

WESTERN VIRGINIA WATER AUTHORITY – CONSTRUCTION STANDARDS

REVISION	DATE		FIRE HYDRANT ASSEMBLY	W-18
	07/01/04			
	03/01/06			

NOTES:
1. BEDDING, HAUNCHING AND INITIAL BACKFILL CONSTRUCTION SHALL BE IN ACCORDANCE WITH MANUFACTURER'S RECOMMENDATION.
2. ALL PVC PIPE SHALL BE BEDDED IN COMPACTED VDOT #57 OR #68 STONE.
3. IN AREAS NOT SUBJECTED TO VEHICULAR TRAFFIC, BEDDING STONE AND FILL SHALL BE PLACED IN 6" LIFTS FROM BOTTOM OF TRENCH TO 1' ABOVE THE PIPE AND THE REMAINING SHALL BE PLACED IN 12" LIFTS AND SHALL BE COMPACTED TO AT LEAST 90% OF MAXIMUM DENSITY AS DETERMINED BY ASTM D 698.
4. BEDDING REQUIREMENTS FOR DUCTILE IRON WATER LINE ARE DEPENDENT ON MANUFACTURER'S BEDDING CRITERIA.
5. ALL EXCAVATIONS SHALL COMPLY WITH OSHA TECHNICAL MANUAL, CHAPTER 2, TITLED "EXCAVATIONS:HAZARD RECOGNITION IN TRENCHING AND SHORING."

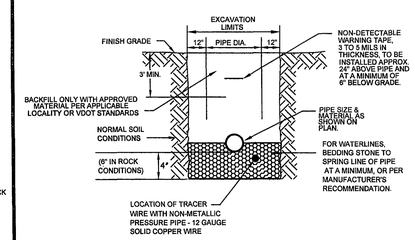

WESTERN VIRGINIA WATER AUTHORITY – CONSTRUCTION STANDARDS

REVISION	DATE		BEDDING AND BACKFILL OUTSIDE OF PAVED AREAS	W-24
	07/01/04			
	03/01/06			

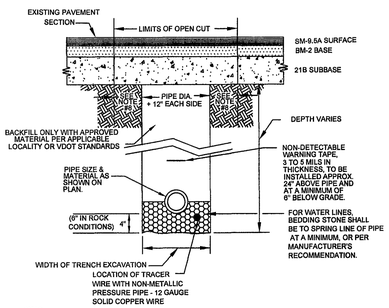

NOTES:

1. BEDDING, HAUNCHING AND INITIAL BACKFILL CONSTRUCTION SHALL BE IN ACCORDANCE WITH MANUFACTURER'S RECOMMENDATION.
2. ALL PVC PIPE SHALL BE BEDDED IN COMPACTED VDOT #57 OR #68 STONE.
3. IN ROANOKE COUNTY, THE CONTRACTOR SHALL REPLACE THE OPEN CUT WITH A MINIMUM TOP COURSE OF 1.5" (MINIMUM) VDOT SM-9.5A, BASE COURSE OF 8" VDOT BM-25A, AND SUBBASE OF 10" VDOT 21B, OR AS REQUIRED BY VDOT. IN ROANOKE CITY, CONTRACTOR SHALL REPLACE PAVEMENT AS REQUIRED BY CITY OF ROANOKE RIGHT OF WAY EXCAVATION AND RESTORATION STANDARDS.
4. ALL CONSTRUCTION WITHIN THE PUBLIC RIGHT-OF-WAY SHALL BE AS SPECIFIED BY VDOT OR APPLICABLE LOCALITY.
5. PRIOR TO CONSTRUCTION, CONTRACTOR IS RESPONSIBLE FOR SECURING ALL REQUIRED PERMITS FROM VDOT AND/OR APPLICABLE LOCALITY.
6. IN AREAS SUBJECTED TO VEHICULAR TRAFFIC, BEDDING STONE AND FILL SHALL BE PLACED IN 6" LIFTS AND SHALL BE COMPACTED TO AT LEAST 95% OF MAXIMUM DENSITY AS DETERMINED BY ASTM D 698.
7. BEDDING REQUIREMENTS FOR DUCTILE WATER LINE ARE DEPENDENT ON MANUFACTURER'S BEDDING CRITERIA.
8. BENCHCUT ON EACH SIDE OF PAVEMENT: CITY OF ROANOKE EQUALS 12"; VDOT RIGHT-OF-WAY EQUALS 6".
9. ALL EXCAVATIONS SHALL COMPLY WITH OSHA TECHNICAL MANUAL, CHAPTER 2, TITLED "EXCAVATIONS: HAZARD RECOGNITION IN TRENCHING AND SHORING."

WESTERN VIRGINIA WATER AUTHORITY – CONSTRUCTION STANDARDS

REVISION	DATE		BEDDING AND BACKFILL UNDER PAVEMENT AND RIGHT-OF-WAY	W-25
	07/01/04			
	03/01/06			

WVWA ID# 6QZNLL

LUMSDEN ASSOCIATES, P.C.
ENGINEERS-SURVEYORS-PLANNERS
ROANOKE, VIRGINIA
4664 BRAMBLETON AVENUE
P.O. BOX 20649
ROANOKE, VIRGINIA 24018
PHONE: (540) 774-4411
FAX: (540) 772-9445
E-MAIL: MAIL@LUMSDENPC.COM

COMMONWEALTH OF VIRGINIA
THOMAS C. DALE
No. 033002
10-23-06
PROFESSIONAL ENGINEER

WATER AND SANITARY SEWER DETAILS

SECTION No. 16
SAMUEL'S GATE
AT THE ORCHARDS
PREPARED FOR
F. & W. COMMUNITY
DEVELOPMENT CORPORATION
HOLLINS MAGISTERIAL DISTRICT
ROANOKE COUNTY, VIRGINIA

REVISIONS		
NO.	DATE	DESCRIPTION
1		
2		
3		
4		
5		

DATE: October 23, 2006
SCALE: NONE
COMMISSION NO: 2005-346
SHEET 15 OF 16

05346comp-sh15-nd02.plt
w:\drawings\2005\05346\eng\05346comp.dwg