1. SETTER TO BE A.Y. McDONALD 720-215WXDD33, FORD V872-15W-11-33 OR APPROVED EQUAL.
2. SADDLES MUST BE USED WITH ALL PLASTIC & DUCTILE IRON PIPE. SERVICE SADDLES SHALL BE USED IN ACCORDANCE WITH WATER DISTRIBUTION PIPING SPECIFICATION. SERVICE SADDLES FOR PLASTIC PIPE SHALL BE: POWERSEAL 3417, OR 3412AS, ROMAC 202S, OR 306, OR FORD METER FS202 OR FS303. FOR DUCTILE IRON PIPE USE THE ABOVE OR POWERSEAL 3413, ROMAC 202 OR FORD METER F202.
3. METER BOX SHALL BE CARSON/MID-STATES PLASTICS, INC. PLASTIC BOX WITH FORD "A" DOMESTIC SERIES FRAME WITH A NICOR DOMESTIC 12.25 CX LID WITH SENSUS RECESS AND WVWA LOGO, ADS CORRUGATED HDPE BOX WITH FORD "A" DOMESTIC SERIES FRAME WITH A NICOR DOMESTIC 12.25 CX LID WITH SENSUS RECESS AND WVWA LOGO OR APPROVED EQUAL. METER BOX SHALL NOT BE PLACED IN AREAS SUBJECT TO VEHICULAR TRAFFIC. IF TRAFFIC BEARING BOX IS REQUIRED, DESIGN ENGINEER SHALL CONSULT WITH PARTICIPATING UTILITY TO DETERMINE SITE SPECIFIC REQUIREMENTS.
4. CORPORATION STOP SHALL BE FORD FB1000-4-G-NL, MUELLER B-25008 OR APPROVED EQUAL.
5. SERVICE SHALL BE "K" TYPE COPPER, OR COPPER TUBE SIZE POLYETHYLENE (PE) 4710, SDDR-9 (200 psi).
6. WHENEVER SIDEWALK EXISTS OR IS PROPOSED, MODIFY METER LOCATION AS DIRECTED.

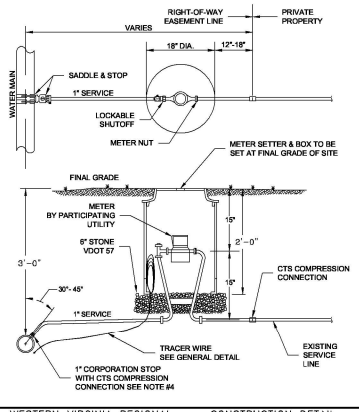

WESTERN VIRGINIA REGIONAL – CONSTRUCTION DETAIL

SINGLE RESIDENTIAL WATER SERVICE (REPLACEMENT OF EXISTING SERVICE) — 09/07/17 — W–2

1. ALL METERS ARE TO BE PROVIDED AND INSTALLED BY PARTICIPATING UTILITY AT OWNER/DEVELOPER'S EXPENSE. METER BOX, SERVICE, AND SETTER TO BE FURNISHED AND INSTALLED BY OWNER/DEVELOPER IN ACCORDANCE WITH THE MINIMUM REQUIREMENTS SHOWN BELOW.
2. SADDLES MUST BE USED WITH ALL PLASTIC & DUCTILE IRON PIPE. SERVICE SADDLES SHALL BE USED IN ACCORDANCE WITH WATER DISTRIBUTION PIPING SPECIFICATION. SERVICE SADDLES FOR PLASTIC PIPE SHALL BE: POWERSEAL 3417, OR 3412AS, ROMAC 202S, OR 306, OR FORD METER FS202 OR FS303. FOR DUCTILE IRON PIPE USE THE ABOVE OR POWERSEAL 3413, ROMAC 202 OR FORD METER F202.
3. CORPORATION STOP SHALL BE FORD FB1000-4-G-NL, MUELLER B-25008 OR APPROVED EQUAL.
4. METER BOXES LOCATED IN AREAS SUBJECT TO VEHICULAR TRAFFIC SHALL BE CONCRETE WITH H-20 RATED TRAFFIC BEARING HATCH. ALL OTHER METER BOXES SHALL BE CARSON/MID-STATES PLASTICS, INC. PLASTIC BOX, ADS CORRUGATED HDPE BOX, OR APPROVED EQUAL. MINIMUM METER BOX & LID DIAMETERS SHALL BE IN ACCORDANCE WITH SIZING CHART BELOW.
5. SERVICE SHALL BE "K" TYPE COPPER OR P.E. 4710 ,CTS O.D., MINIMUM CELL CLASS 445474E AND 445474D.
6. COPPER METER SETTER TO BE FORD, A.Y. MCDONALD OR APPROVED EQUAL WITH ANGLE DUAL CHECK VALVE AND BYPASS HAVING LOCKABLE SHUTOFF VALVE.
7. SERVICES REQUIRING METERS LARGER THAN 2-INCH SHALL BE REVIEWED BY THE PARTICIPATING UTILITY ON A CASE BY CASE BASIS.

TRAFFIC BEARING LOCATION

TRAFFIC BEARING VAULT AND H-20 RATED HATCH SHALL BE SIZED IN ACCORDANCE WITH DIMENSIONAL REQUIREMENTS SHOWN BELOW.

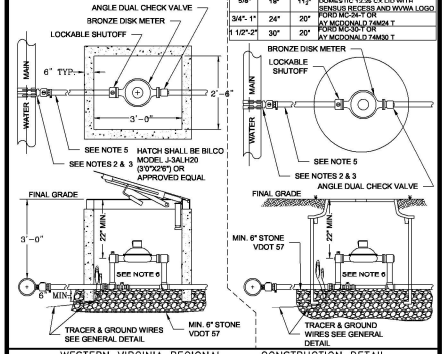

NON TRAFFIC BEARING LOCATION

SIZING CHART LID

METER SIZE	BOX DIA (MIN.)	LID DIA (MIN.)	COVER & LID MODEL (OR APPROVED EQUAL)
5/8"	18"	11½"	FORD "A" SERIES FRAME & NICOR DOMESTIC 12.36 CX LID WITH SENSUS RECESS AND WVWA LOGO
3/4"- 1"	24"	20"	FORD MC-3A-T OR AY MCDONALD 74M24 T
1 1/2"-2"	30"	20"	FORD MC-3D-T OR AY MCDONALD 74M30 T

WESTERN VIRGINIA REGIONAL – CONSTRUCTION DETAIL

COMMERCIAL WATER SERVICE METER SIZES 5/8" – 2" — 09/07/17 — W–5

1. FOR 6" FIRE LINE, EXTERIOR VAULT DIMENSIONS SHALL BE (L x W x H) 6' X 6' X 5' WITH DOMESTIC TAP MADE INSIDE VAULT AS SHOWN BELOW.
2. FOR 8" FIRE LINE EXTERIOR VAULT DIMENSIONS SHALL BE (L X W X H) 6' X 6' X 6' WITH DOMESTIC TAP MADE OUTSIDE VAULT. BALL VALVE WITH LOCKING TABS SHALL BE PROVIDED INSIDE VAULT TO ALLOW FOR ISOLATION OF DOMESTIC METER.
3. SINGLE DETECTOR CHECK VALVE SHALL BE WILKINS 310 DALM , WATTS ES-SS07F - BP, OR APPROVED EQUAL WITH FLANGED END CONNECTIONS, BYPASS ASSEMBLY, AND ONE OS&Y GATE VALVE.
4. BYPASS ASSEMBLY SHALL INCLUDE 2 BALL VALVES TO ISOLATE METER.
5. DOMESTIC SHALL BE TYPE K COPPER WITH GRIP JOINT FITTINGS, BALL VALVE AT TAPPING SADDLE (WITH LOCKING TABS) AND CHECK VALVE ON OUTLET.
6. DOMESTIC METER AND BYPASS METER TO BE SUPPLIED BY OWNER AND INSTALLED BY VENDOR.
7. "UNI FLANGE" ADAPTOR FLANGE, OR APPROVED EQUAL, OR FLANGED - PLAIN END PIPING REQUIRED FOR INLET AND OUTLET PIPING.
8. VAULT TO BE INSTALLED ON MIN. 6" COMPACTED VDOT #57 STONE WITH FILTER FABRIC PLACED BETWEEN BOTTOM OF VAULT AND STONE BEDDING. FILTER FABRIC TO EXTEND VERTICALLY A MINIMUM OF 6" ON ALL FOUR SIDES OF VAULT.

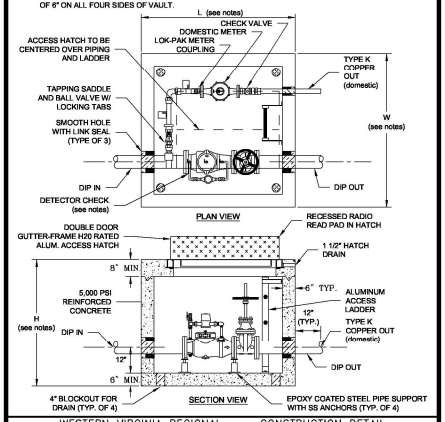

WESTERN VIRGINIA REGIONAL – CONSTRUCTION DETAIL

COMMERCIAL METER VAULT — 09/07/17 — W–7

1. FILTER FABRIC TO BE INSTALLED BETWEEN BOTTOM OF PIPE AND STONE BEDDING. FABRIC TO EXTEND VERTICALLY A MINIMUM OF 6" FROM BOTTOM OF VAULT (FULL CIRCUMFERENCE).

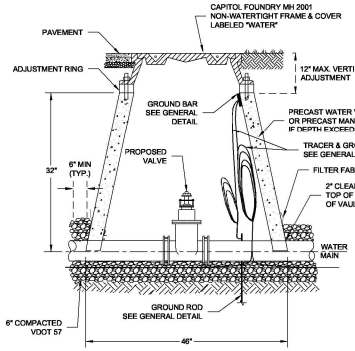

WESTERN VIRGINIA REGIONAL – CONSTRUCTION DETAIL

WATER LINE VALVE & VAULT — 01/01/14 — W–9

1. SEE RESIDENTIAL WATER SERVICE DETAIL FOR SADDLE REQUIREMENTS.
2. LARGER COMBINATION VALVE MAY BE REQUIRED DEPENDING ON APPLICATION.

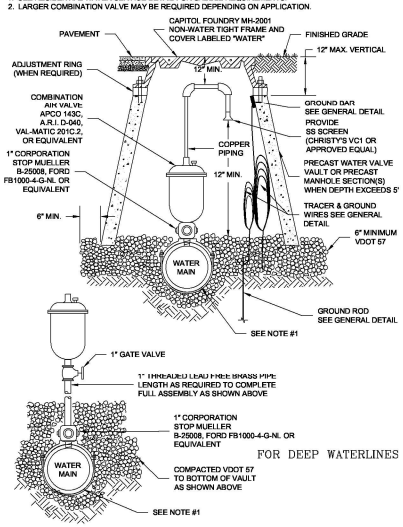

WESTERN VIRGINIA REGIONAL – CONSTRUCTION DETAIL

COMBINATION AIR VALVE ASSEMBLY — 02/10/15 — W–13

1. 2" CORPORATION STOP, MUELLER B-25008, FORD FB1000-4-G-NL OR EQUIVALENT.
2. LIQUID FILLED PRESSURE GAUGE.
3. 2" FLANGED PRESSURE REGULATING VALVE (CLA-VAL MODEL 90-01 OR APPROVED EQUAL) SET AT WORKING PRESSURE.
4. FLANGE x FLANGE MAIN LINE PRESSURE REGULATING VALVE (CLA-VAL MODEL 90-01 OR APPROVED EQUAL) SET AT 5 psi LESS THAN #3. (CLA-VAL 690-01 OR APPROVED EQUAL) MAY BE ALLOWED IN SOME INSTALLATIONS, CONFIRM WITH PARTICIPATING UTILITY.
5. FLANGE x FLANGE GATE VALVE, WITH HAND WHEEL. ONE SIZE LESS THAN MAIN LINE.
6. FLANGE x FLANGE PRESSURE RELIEF VALVE, ONE SIZE LESS THAN MAIN LINE (CLA-VAL MODEL 650-01 OR APPROVED EQUAL) SET AT 5 psi GREATER THAN #3.
7. VAULT SHALL BE PRE-CAST 5,000 PSI REINFORCED CONCRETE.
8. MAIN LINE (INLET, OUTLET, AND INTERIOR) PIPING SHALL BE FLANGED - PLAIN END, OR PLAIN END DUCTILE IRON PIPE WITH APPROVED FLANGE ADAPTER. MIN. PRESSURE CLASS 350 OR THICKNESS CLASS 50.
9. VAULT TO BE INSTALLED ON MIN. 6" COMPACTED VDOT #57 STONE WITH FILTER FABRIC PLACED BETWEEN BOTTOM OF VAULT AND STONE BEDDING. FILTER FABRIC TO EXTEND VERTICALLY A MINIMUM OF 6" ON ALL FOUR SIDES OF VAULT.

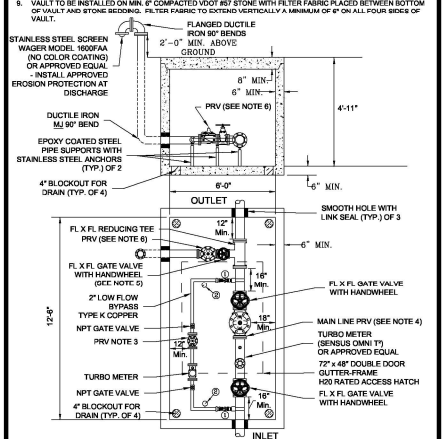

WESTERN VIRGINIA REGIONAL – CONSTRUCTION DETAIL

MAIN LINE – PRESSURE REDUCING VALVE ASSEMBLY — 1/26/16 — W–14

1. USE MODERATELY STIFF MIX OF NON SHRINK GROUT, SAND, AND 1/2" AND LESS DIAMETER GRAVEL WITH 28 DAYS, STRENGTH AT MINIMUM 3,000 P.S.I.
2. MIX IS TO BE FORCED INTO ALL GROOVES AND UNDER FLANGE OF FRAME AND LEFT AT OR ABOVE TOP OF FLANGE.
3. DO NOT BACKFILL AROUND FRAME AND COVER, FOR 48 HOURS AFTER CONCRETE IS PLACED. THE USE OF HIGH EARLY STRENGTH CEMENT WOULD REDUCE TIME TO (24 HRS.)
4. RESTRICT TRAFFIC LOAD FOR A MINIMUM OF 24 HOURS.

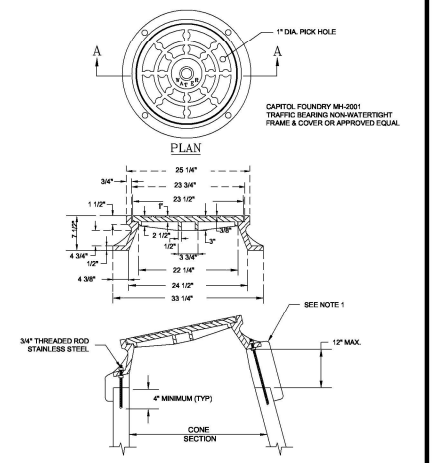

WESTERN VIRGINIA REGIONAL – CONSTRUCTION DETAIL

VAULT FRAME AND COVER — 01/01/14 — W–16

1. PUBLIC HYDRANTS SHALL BE PAINTED SILVER WITH AN OIL-BASED PAINT. PRIVATE HYDRANTS SHALL ALSO BE PAINTED SILVER WITH AN OIL-BASED PAINT UNLESS OTHERWISE SPECIFIED BY THE JURISDICTIONAL FIRE MARSHALL.
2. FIRE HYDRANT SHALL BE INSTALLED 2' MIN. AND 4' MAX. FROM BACK OF CURB OR 6' MIN. AND 12' MAX. FROM EDGE OF PAVEMENT WHEN CURB IS NOT PRESENT. FIRE HYDRANT TO BE INSTALLED WITHIN RIGHT-OF-WAY OR EASEMENT LINE.
3. AREA AROUND HYDRANT AT A RADIUS OF 4' TO BE LEVEL AND UNOBSTRUCTED.
4. WATERPROOF BAGS OR OUT OF SERVICE RINGS SHALL BE PLACED OVER ALL NEWLY INSTALLED FIRE HYDRANTS.
5. HYDRANT ASSEMBLIES SHALL BE RODDED AND RESTRAINED WITH APPROVED M.J. GLAND RESTRAINTS. HIGH PRESSURE (OVER 150 PSI) ALSO REQUIRES CONCRETE THRUST BLOCKS AS SHOWN BELOW.
6. IF DURING CONSTRUCTION THE SEASONAL WATER LEVEL IS NOTED TO BE ABOVE THE DRAIN OUTLETS OF THE PROPOSED HYDRANT, THE PARTICIPATING UTILITY WILL BE NOTIFIED IMMEDIATELY SO THAT THE HYDRANT CAN BE RELOCATED TO A SUITABLE LOCATION, OMITTED, OR THE DRAIN HOLE PLUGGED.
7. TWO WRAPS OF TRACER WIRE SHALL BE WRAPPED AROUND BASE OF HYDRANT.
8. APPROVED MODELS - AVK MODEL 2780, AFC MODEL B-84-B-5, MUELLER CENTURION A423, KENNEDY K81D OR EQUIVALENT.
9. WHERE HYDRANT LATERAL(S) IS APPROVED BY THE PARTICIPATING UTILITY TO BE LONGER IN LENGTH, MAKING THE CONTINUOUS SECTION OF PIPE ON EACH SIDE OF THE GATE VALVE UNFEASIBLE, RESTRAINED PIPE JOINTS SHALL BE INSTALLED BETWEEN THE TEE AND GATE VALVE IN LIEU OF RODDING. HOWEVER, A RODDED CONTINUOUS SECTION OF PIPE SHALL ALWAYS BE INSTALLED BETWEEN THE GATE VALVE AND HYDRANT.

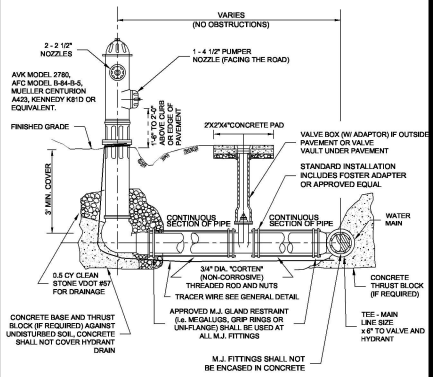

WESTERN VIRGINIA REGIONAL – CONSTRUCTION DETAIL

FIRE HYDRANT ASSEMBLY — 02/10/15 — W–17

CONSTRUCTION DRAWINGS

STATE OF VIRGINIA — SIMON L. RUTROUGH — Lic. No. 050774 — 8/12/2022 — PROFESSIONAL ENGINEER

parker DESIGN GROUP
ENGINEERS • SURVEYORS
PLANNERS • LANDSCAPE ARCHITECTS
2122 Carolina Ave, SW
Roanoke, VA 24014
(540)-387-1153
1915-B W. Cary Street
Richmond, VA 23220
(804)-358-2947
www.parkerdg.com

These documents are the property of Parker Design Group(PDG) and may not be reproduced or used without the express permission of PDG. Any reuse of these documents without authorization of PDG will be at the sole risk of the individual or entity utilizing said documents.

SCRUGGS ROAD AREA IMPROVEMENTS
WINDMERE - COMPASS COVE - BERNARD'S LANDING
WATER MAIN EXTENSION & PRV SITES

PREPARED FOR WESTERN VIRGINIA WATER AUTHORITY
FRANKLIN COUNTY, VIRGINIA

REVISIONS

DESIGNED BY: CFP
DRAWN BY: CEP
CHECKED BY: JDE & SLR
SCALE: NOT TO SCALE
DATE: AUGUST 12, 2022
PROJECT NUMBER: 21-0287
SHEET TITLE: DETAILS

C3.0