1. FILTER FABRIC TO BE INSTALLED BETWEEN BOTTOM OF PIPE AND STONE BEDDING. FABRIC TO EXTEND VERTICALLY A MINIMUM OF 6" FROM BOTTOM OF VAULT (FULL CIRCUMFERENCE).

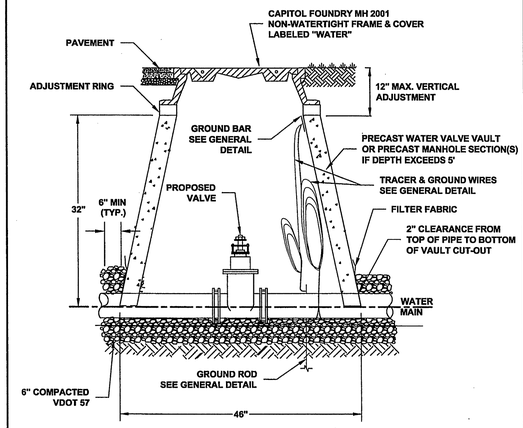

WESTERN VIRGINIA REGIONAL – CONSTRUCTION DETAIL

WATER LINE VALVE & VAULT — W–9 — 01/01/12

1. SEE RESIDENTIAL WATER SERVICE DETAIL FOR SADDLE REQUIREMENTS.
2. LARGER COMBINATION VALVE MAY BE REQUIRED DEPENDING ON APPLICATION.

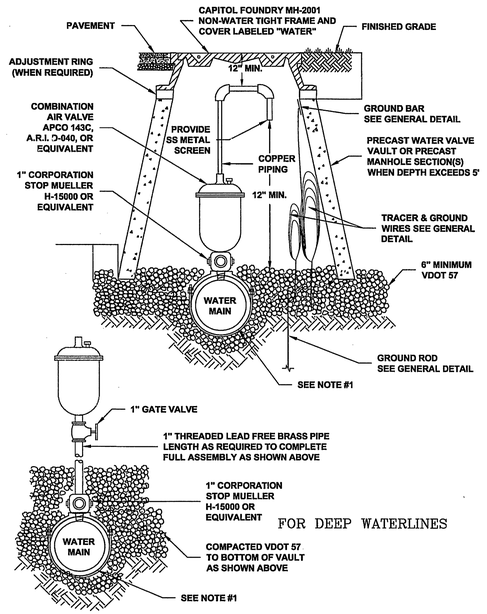

WESTERN VIRGINIA REGIONAL – CONSTRUCTION DETAIL

COMBINATION AIR VALVE ASSEMBLY — W–13 — 01/01/12

Stationary Operation on a Shoulder
(Figure TTC-4.0)

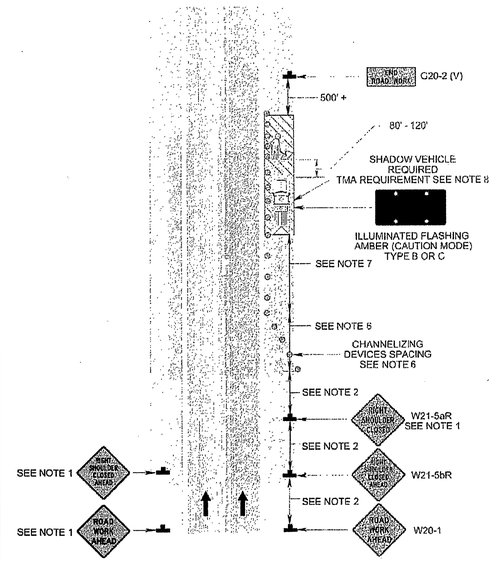

Lane Closure on a Two-Lane Roadway Using Flaggers
(Figure TTC-23.0)

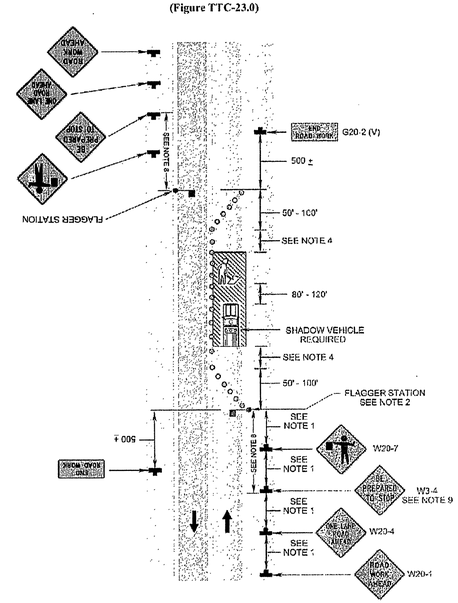

Shoulder Operation with Minor Encroachment
(Figure TTC-5.0)

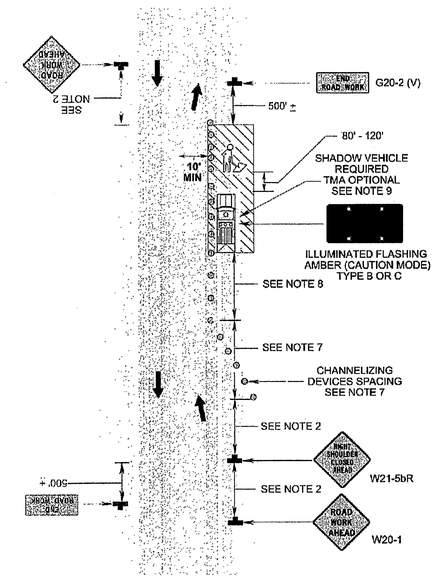

1. TO BE USED WHEN STANDARD VAULT CONSTRUCTION EXCEEDS MAXIMUM VERTICAL HEIGHT OF 5'.

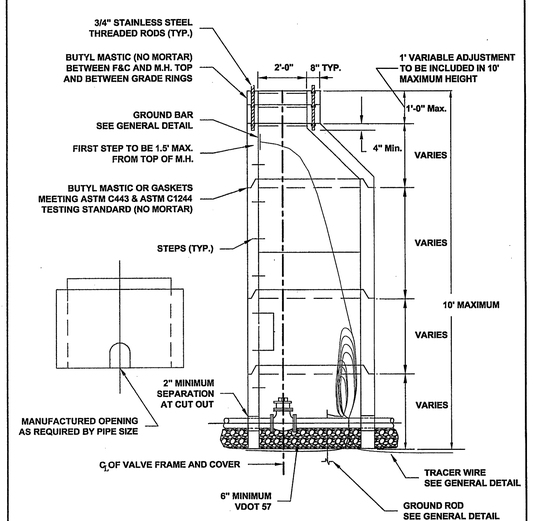

WESTERN VIRGINIA REGIONAL – CONSTRUCTION DETAIL

DEEP VALVE VAULT (MANHOLE) — W–15 — 01/01/12

ANDERSON & ASSOCIATES, INC.
Professional Design Services
www.andassoc.com
VA - NC - TN - WV
100 Ardmore St.
Blacksburg, Va. 24060
540-552-5592

COMMONWEALTH OF VIRGINIA
LOWELL THOMAS BOWMAN, III
Lic. No. 49177
8 OCT 2012
PROFESSIONAL ENGINEER

SHENANDOAH AVENUE WATER LINE REPLACEMENT PROJECT DETAILS II

Designed By:	LTB
Drawn By:	CBD/LTB
Checked By:	TFB
Date:	26 JULY 2012
Revised:	23 AUG 2012 08 OCT 2012
Scale:	
Plan #:	29753-001
Sheet:	10 OF 12

bowman / Oct 09, 2012 2:26pm / \\AAPROJECTS\Projects\29\29753\29753_ENGINEERING\Design\Plans\29753_WVWA_Shenandoah_Ave_Design2.dwg: SHT 10