1. SETTER TO BE A.Y. McDONALD 20-215WDDD33, FORD VBHH72-15W-11-33 OR APPROVED EQUAL.
2. SADDLES MUST BE USED WITH ALL PLASTIC & DUCTILE IRON PIPE. SERVICE SADDLES SHALL BE USED IN ACCORDANCE WITH WATER DISTRIBUTION PIPING SPECIFICATION. SERVICE SADDLES FOR PLASTIC PIPE SHALL BE: POWERSEAL 3417, OR 3412AS, ROMAC 202S, OR 306, OR FORD METER FS202 OR FS303. FOR DUCTILE IRON PIPE USE THE ABOVE OR POWERSEAL 3413, ROMAC 202 OR FORD METER F202.
3. METER BOX SHALL BE CARSON/MID-STATES PLASTICS, INC. PLASTIC BOX WITH FORD A32-T (ELECTRONIC READ LID) OR A. Y. McDONALD MODEL 74M32CTC CAST IRON BASE & COVER OR APPROVED EQUAL. METER BOX SHALL NOT BE PLACED IN AREAS SUBJECT TO VEHICULAR TRAFFIC. IF TRAFFIC BEARING BOX IS REQUIRED, DESIGN ENGINEER SHALL CONSULT WITH PARTICIPATING UTILITY TO DETERMINE SITE SPECIFIC REQUIREMENTS.
4. CORPORATION STOP SHALL BE FORD F1000-4-G OR APPROVED EQUAL.
5. SERVICE SHALL BE "K" TYPE COPPER, OR COPPER TUBE SIZE POLYETHYLENE (PE) 4710, SODR-9 (200 psi).
6. WHENEVER SIDEWALK EXISTS OR IS PROPOSED, MODIFY METER LOCATION AS DIRECTED.

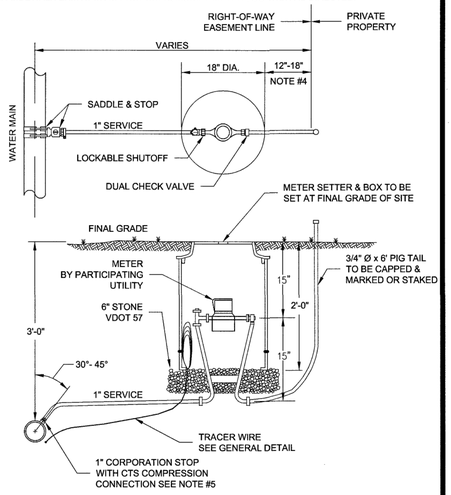

WESTERN VIRGINIA REGIONAL - CONSTRUCTION DETAIL

SINGLE RESIDENTIAL WATER SERVICE - (NEW DEVELOPMENT) (LINE PRESSURE UNDER 120 PSI) — 01/01/12 — **W-1**

1. SETTER TO BE A.Y. McDONALD 20-215 WDDD33, FORD VBHH72-15W-11-33 OR APPROVED EQUAL.
2. SADDLES MUST BE USED WITH ALL PLASTIC DUCTILE IRON PIPE. SERVICE SADDLES SHALL BE USED IN ACCORDANCE WITH WATER DISTRIBUTION PIPING SPECIFICATION. SERVICE SADDLES FOR PLASTIC PIPE SHALL BE POWERSEAL 3417, OR 3412AS, ROMAC 202S, OR 306, OR FORD METER FS202 OR FS303. FOR DUCTILE IRON PIPE USE THE ABOVE OR POWERSEAL 3413, ROMAC 202 OR FORD METER F202.
3. METER BOX SHALL BE CARSON/MID-STATES PLASTICS, INC. PLASTIC BOX WITH FORD A32-T (ELECTRONIC READ LID) OR A. Y. McDONALD MODEL 74M32CTC CAST IRON BASE & COVER OR APPROVED EQUAL. USE OF TRAFFIC BEARING BOX SHALL BE APPROVED BY THE AUTHORITY. METER BOX SHALL NOT BE PLACED IN AREAS SUBJECT TO VEHICULAR TRAFFIC. IF TRAFFIC BEARING BOX IS REQUIRED, DESIGN ENGINEER SHALL CONSULT WITH PARTICIPATING UTILITY TO DETERMINE SITE SPECIFIC REQUIREMENTS.
4. WHENEVER SIDEWALK EXISTS OR IS PROPOSED, MODIFY METER LOCATION AS DIRECTED.
5. CORPORATION STOP SHALL BE FORD F1000-4-G OR APPROVED EQUAL.
6. SERVICE SHALL BE "K" TYPE COPPER, OR COPPER TUBE SIZE POLYETHYLENE (PE) 4710, SODR-9 (200 psi).

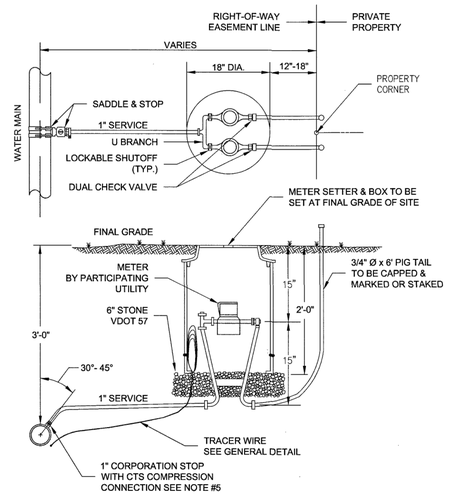

WESTERN VIRGINIA REGIONAL - CONSTRUCTION DETAIL

DOUBLE RESIDENTIAL WATER SERVICE (LINE PRESSURE UNDER120 PSI) — 01/01/12 — **W-4**

1. FILTER FABRIC TO BE INSTALLED BETWEEN BOTTOM OF PIPE AND STONE BEDDING. FABRIC TO EXTEND VERTICALLY A MINIMUM OF 6" FROM BOTTOM OF VAULT (FULL CIRCUMFERENCE).

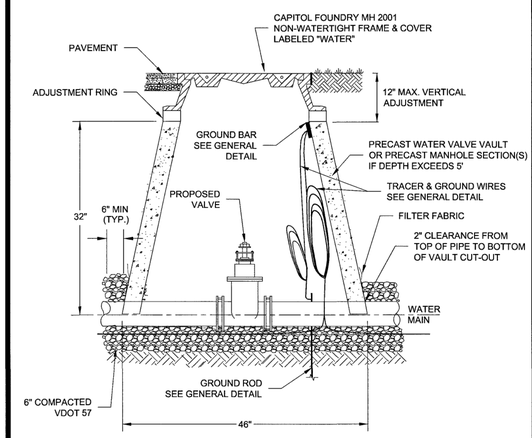

WESTERN VIRGINIA REGIONAL - CONSTRUCTION DETAIL

WATER LINE VALVE & VAULT — 01/01/12 — **W-9**

1. SEE RESIDENTIAL WATER SERVICE DETAIL FOR SADDLE REQUIREMENTS.
2. LARGER COMBINATION VALVE MAY BE REQUIRED DEPENDING ON APPLICATION.

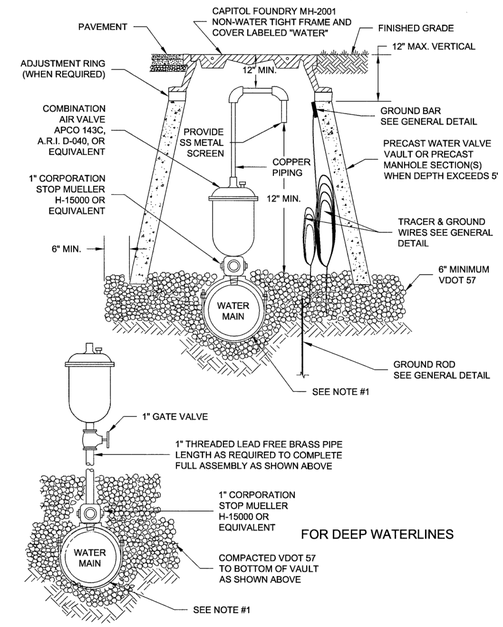

WESTERN VIRGINIA REGIONAL - CONSTRUCTION DETAIL

COMBINATION AIR VALVE ASSEMBLY — 01/01/12 — **W-13**

1. USE MODERATELY STIFF MIX OF NON SHRINK GROUT, SAND, AND 1/2" AND LESS DIAMETER GRAVEL WITH 28 DAYS, STRENGTH AT MINIMUM 3,000 P.S.I.
2. MIX IS TO BE FORCED INTO ALL GROOVES AND UNDER FLANGE OF FRAME AND LEFT AT OR ABOVE TOP OF FLANGE.
3. DO NOT BACKFILL AROUND FRAME AND COVER, FOR 48 HOURS AFTER CONCRETE IS PLACED. THE USE OF HIGH EARLY STRENGTH CEMENT WOULD REDUCE TIME TO (24 HRS.)
4. RESTRICT TRAFFIC LOAD FOR A MINIMUM OF 24 HOURS.

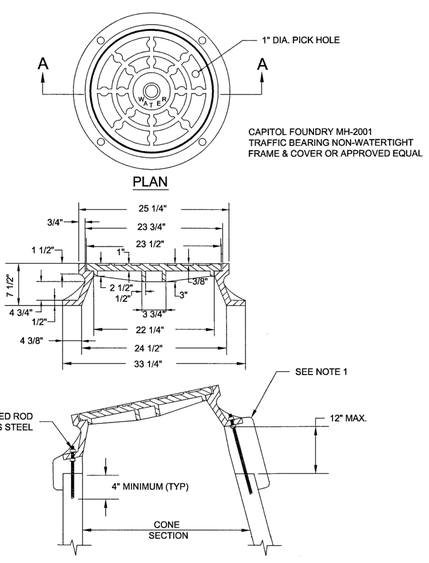

WESTERN VIRGINIA REGIONAL - CONSTRUCTION DETAIL

VAULT FRAME AND COVER — 01/01/12 — **W-16**

1. PUBLIC HYDRANTS SHALL BE PAINTED SILVER WITH AN OIL-BASED PAINT AND PRIVATE HYDRANTS SHALL BE PAINTED WHITE WITH AN OIL-BASED PAINT.
2. FIRE HYDRANT SHALL BE INSTALLED 2' MIN. AND 4' MAX. FROM BACK OF CURB OR 6' MIN. AND 12' MAX. FROM EDGE OF PAVEMENT WHEN CURB IS NOT PRESENT. FIRE HYDRANT TO BE INSTALLED WITHIN RIGHT-OF-WAY OR EASEMENT LINE.
3. AREA AROUND HYDRANT AT A RADIUS OF 4' TO BE LEVEL AND UNOBSTRUCTED.
4. WATERPROOF BAGS OR OUT OF SERVICE RINGS SHALL BE PLACED OVER ALL NEWLY INSTALLED FIRE HYDRANTS.
5. HIGH PRESSURE (OVER 120 PSI) REQUIRES THE USE OF ALL 3 RESTRAINTS.
6. IF DURING CONSTRUCTION THE SEASONAL WATER LEVEL IS NOTED TO BE ABOVE THE DRAIN OUTLETS OF THE PROPOSED HYDRANT, THE PARTICIPATING UTILITY WILL BE NOTIFIED IMMEDIATELY SO THAT THE HYDRANT CAN BE RELOCATED TO A SUITABLE LOCATION, OMITTED, OR THE DRAIN HOLE PLUGGED.
7. TWO WRAPS OF TRACER WIRE SHALL BE WRAPPED AROUND BASE OF HYDRANT.
8. APPROVED MODELS - AVK MODEL 2780, AFC MODEL B-84-B-5, MUELLER CENTURION A423, KENNEDY K81D EQUIVALENT.

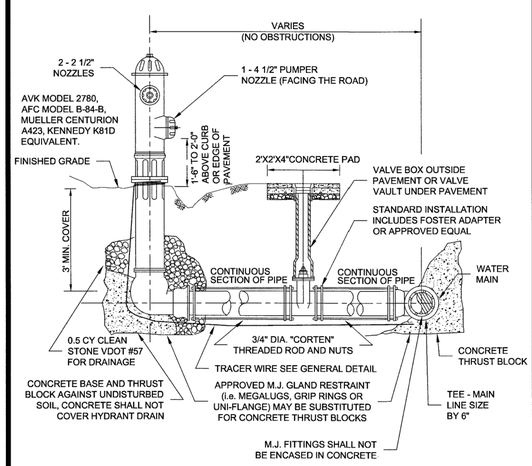

WESTERN VIRGINIA REGIONAL - CONSTRUCTION DETAIL

FIRE HYDRANT ASSEMBLY — 01/01/12 — **W-17**

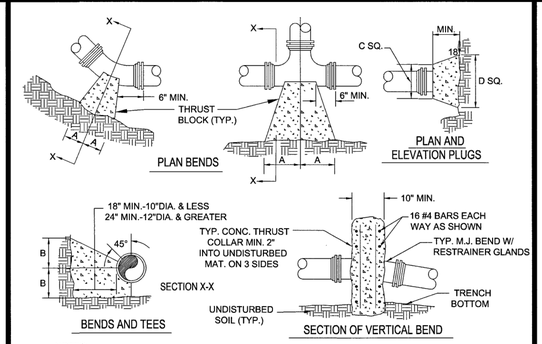

NOTES:
1. FOR VERT. BEND DOWN IN EXCESS OF 11 1/4" BEND, ANCHORAGE SHALL BE DESIGNED BY ENGINEER.
2. FOR VERT. BEND UPWARD, BLOCKING TO BE SIMILAR TO THAT FOR HORIZ. BEND.
3. GLANDS & BOLTS SHALL BE PROTECTED FROM CONC. WITH PLASTIC SHEETING WHEN POURING THRUST BLOCKS.
4. ALL THRUST BLOCK & SUPPORT CONC. SHALL BE 3000 PSI READY MIX CONC.
5. THRUST BLOCKS WITH "B" DIMENSION GREATER THAN 30" SHALL HAVE THE RESTRAINED PIPE INSTALLED WITH A MINIMUM OF 4' OF COVER.
6. IF UNDER 100 PSI WORKING PRESSURE, RESTRAINED JOINTS MUST BE USED. IF EQUAL OR GREATER THAN 100 PSI BOTH BLOCK AND RESTRAINED JOINTS ARE REQUIRED.

PRESSURE= 200psi
BEARING= 2000psf
FACTOR OF SAFETY= 1.5

PIPE	90° BEND		45° BEND		22 1/2° BEND		11 1/4° BEND		TEE		PLUG	
SIZE	A	B	A	B	A	B	A	B	A	B	C	D
4"	8"	12"	8"	8"	6"	6"	6"	6"	11"	9"	10"	6"
6"	18"	12"	8"	10"	8"	8"	8"	8"	11"	10"	12"	18"
8"	18"	13"	10"	10"	8"	8"	8"	8"	11"	12"	12"	24"
10"	20"	16"	12"	14"	8"	12"	8"	12"	14"	16"	16"	30"
12"	20"	16"	12"	14"	8"	12"	8"	12"	14"	16"	16"	30"
16"	26"	20"	16"	18"	11"	13"	11"	13"	18"	20"	20"	36"
24"	82"	42"	62"	30"	44"	22"	22"	16"	82"	42"	82"	42"
30"	185"	42"	100"	42"	52"	42"	40"	30"	185"	42"	185"	42"

WESTERN VIRGINIA REGIONAL - CONSTRUCTION DETAIL

THRUST BLOCK REQUIREMENTS — 01/01/12 — **W-18**

FACTOR OF SAFETY = 1.5

PIPE SIZE	PIPE MAT'L	90° BEND	45° BEND	22 1/2° BEND	11 1/4° BEND	VALVE /PLUG	TEE BRANCH	REDUCER (NOTE 2)	VERT. 45°	VERT. 22 1/2°	VERT. 11 1/4°
6"	D.I.	28'	12'	6'	3'	38'	34'	20'	23'	11'	5'
8"	D.I.	37'	15'	7'	4'	51'	47'	21'	30'	15'	7'
10"	D.I.	45'	19'	9'	4'	61'	57'	20'	37'	18'	9'
12"	D.I.	53'	22'	11'	5'	73'	69'	38'	43'	21'	10'
6"	PVC	30'	12'	6'	3'	56'	38'	29'	35'	17'	8'
8"	PVC	40'	16'	8'	4'	74'	56'	31'	46'	22'	11'
10"	PVC	47'	20'	9'	5'	89'	82'	30'	56'	27'	13'
12"	PVC	56'	23'	11'	6'	106'	88'	56'	66'	32'	16'

1. ALL JOINTS SHALL BE RESTRAINED ON BOTH SIDES OF THE FITTING FOR THE LENGTH SHOWN UNLESS OTHERWISE INDICATED.
2. REDUCER IS ONE SIZE SMALLER THAN PIPE LISTED. RESTRAINED LENGTH IS UPSTREAM ON THE LARGE SIDE OF THE REDUCER.
3. IF UNDER 100 PSI WORKING PRESSURE, RESTRAINED JOINT(S) ARE TO BE USED. IF EQUAL TO OR OVER 100 PSI WORKING PRESSURE, BOTH THRUST BLOCK AND RESTRAINED JOINTS SHALL BE USED.

WESTERN VIRGINIA REGIONAL - CONSTRUCTION DETAIL

THRUST RESTRAINT OF PIPE JOINTS DESIGN LENGTHS — 01/01/12 — **W-19**

COMMONWEALTH OF VIRGINIA
WM. THOMAS AUSTIN
Lic. No. 0000037
3/08/2013
PROFESSIONAL ENGINEER

Revisions	Date

Issue Date: MAR. 8, 2013
Drawn By: ARB/JEF
Designed By: JEF
Checked By: WTA
Date: 3/08/2013

Mattern & Craig
CONSULTING ENGINEERS • SURVEYORS
701 FIRST STREET, S.W.
ROANOKE, VIRGINIA 24016
(540) 345-9342
FAX (540) 345-7691

THE ESTATES AT SOUTH PEAK
SMITH/PACKET MED-COM, LLC

DETAILS & SECTIONS – WVWA WATER DETAILS

ROANOKE COUNTY, VIRGINIA

Vertical Scale: N/A
Horizontal Scale: N/A
Commission Number: 3101C
Sheet No.: C-14