1. SETTER TO BE A.Y. McDONALD #20-215 WDLL33 , FORD VBHH72-15W-1133 OR APPROVED EQUAL.
2. SADDLES MUST BE USED WITH ALL PLASTIC & CLASS 50 DUCTILE IRON PIPE. SERVICE SADDLES SHALL BE USED IN ACCORDANCE WITH SECTION 2865 OF THE WATER STANDARDS. SERVICE SADDLES FOR PLASTIC PIPE SHALL BE: POWERSEAL 3417, OR 3412AS, ROMAC 202S, OR 306, OR FORD METER F202 OR FS303. FOR DUCTILE IRON PIPE USE THE ABOVE OR POWERSEAL 3413, ROMAC 202 OR FORD METER F202.
3. METER BOX MUST BE MID-STATES PLASTICS, INC. PLASTIC BOX WITH FORD A32-T (ELECTRONIC READ LID) OR A. Y. McDONALD MODEL 74M32C-TC CAST IRON BASE & COVER OR APPROVED EQUAL.
4. WHENEVER SIDEWALK EXISTS OR IS PROPOSED, MODIFY METER LOCATION AS DIRECTED.
5. CORPORATION STOP MUST BE FORD F1000-4-6 OR APPROVED EQUAL.

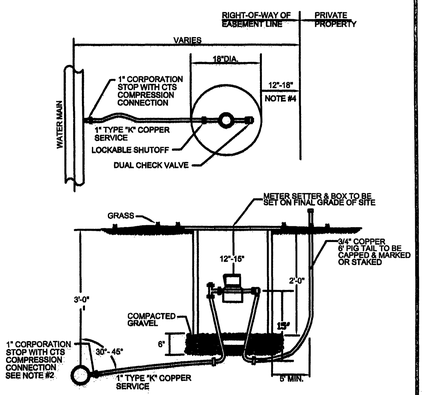

WESTERN VIRGINIA WATER AUTHORITY - CONSTRUCTION STANDARDS

REVISION	DATE		TYPE "A" SINGLE RESIDENTIAL WATER SERVICE (LINE PRESSURE UNDER 80 PSI)	W-01
07/01/04				

1. SETTER TO BE A.Y. McDONALD #20-215 WDLL33 , FORD VBHH73-15W-1133 OR APPROVED EQUAL.
2. METER BOX MUST BE MID-STATES PLASTICS, INC. PLASTIC BOX WITH FORD A32-T (ELECTRONIC READ LID) OR A. Y. McDONALD MODEL 74M32C-TC CAST IRON BASE & COVER OR APPROVED EQUAL.
3. CORPORATION STOP MUST BE FORD F1000-4-6 OR APPROVED EQUAL.

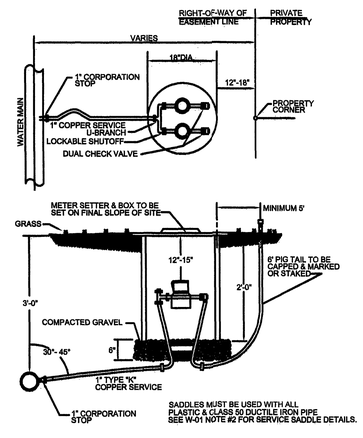

WESTERN VIRGINIA WATER AUTHORITY - CONSTRUCTION STANDARDS

REVISION	DATE		DOUBLE RESIDENTIAL WATER SERVICE	W-04
07/01/04				

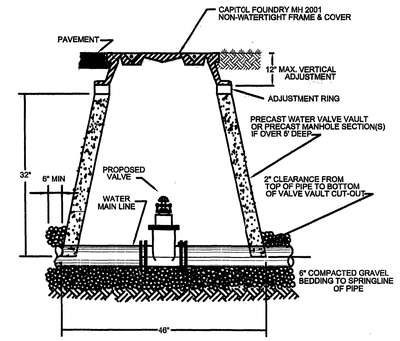

WESTERN VIRGINIA WATER AUTHORITY - CONSTRUCTION STANDARDS

REVISION	DATE		WATER LINE VALVE INSTALLATION	W-08
07/01/04				

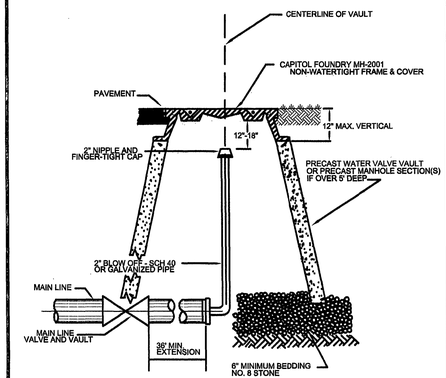

WESTERN VIRGINIA WATER AUTHORITY - CONSTRUCTION STANDARDS

REVISION	DATE		BLOW-OFF ASSEMBLY FOR MAIN LINE TEMPORARY TERMINIATION	W-10
07/01/04				

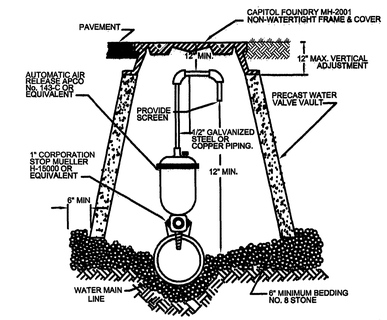

WESTERN VIRGINIA WATER AUTHORITY - CONSTRUCTION STANDARDS

REVISION	DATE		AUTOMATIC AIR RELEASE ASSEMBLY	W-12
07/01/04				

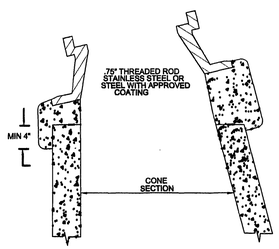

SECTION

NOTE:
1 USE MODERATELY STIFF MIX OF NON SHRINK CEMENT, SAND AND #56 NON-LEAN WASHER GRAVEL WITH 28 DAYS, STRENGTH AT 3,000 P.S.I.
2 MIX IS TO BE FORCED INTO A 1-1 GROOVES AND UNDER FLANGE OF FRAME AND LEFT AT OR ABOVE TOP OF FLANGE
3 MAX. OF 4 BRICK OR CONCRETE BLOCKS TO BE USED FOR GRADE CONTROL.
4 DO NOT BACKFILL AROUND FRAME AND COVER, FOR 48 HOURS AFTER CONC IS PLACED. THE USE OF HIGHEARLY STRENGTH CONCRETE WOULD REDUCE TIME TO (24HRS).
5 RESTRICT TRAFFIC LOAD FOR MIN. 24 HOURS.

WESTERN VIRGINIA WATER AUTHORITY - CONSTRUCTION STANDARDS

REVISION	DATE		INSTALLATION DETAIL FOR ALL FRAMES AND COVERS	W-16
07/01/04				

NOTES:
1. MAIN BODY OF HYDRANT MUST BE PAINTED SILVER WITH RED REFLECTIVE CAPS AND BONNET.
2. FIRE HYDRANT SHALL BE INSTALLED 2' MIN. AND 4' MAX. FROM BACK OF CURB OR 6' MIN. AND 12' MAX. WHEN CURB IS NOT PRESENT. FIRE HYDRANT TO BE INSTALLED WITHIN RIGHT-OF-WAY OR EASEMENT LINE.
3. AREA AROUND HYDRANT AT A RADIUS OF 4' TO BE LEVEL AND UNOBSTRUCTED.
4. WATERPROOF BAGS SHALL BE PLACED OVER ALL NEWLY INSTALLED FIRE HYDRANTS.
5. HIGH PRESSURE (OVER 120 PSI) REQUIRES THE USE ALL 3 RESTRAINTS.

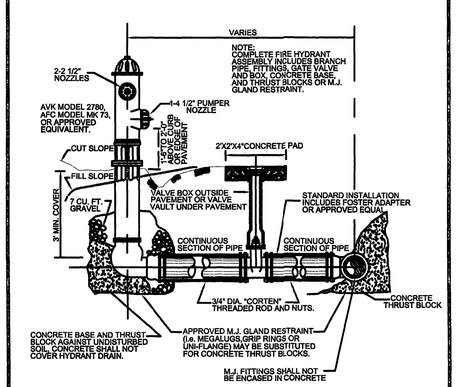

WESTERN VIRGINIA WATER AUTHORITY - CONSTRUCTION STANDARDS

REVISION	DATE		FIRE HYDRANT ASSEMBLY	W-18
07/01/04				

NOTES:
1. ALL MANHOLE FRAMES AND COVERS SHALL BE EAST JORDAN IRON WORKS, INC. WATERTIGHT MANHOLE FRAME MODEL #1045Z WATERTIGHT COVER MODEL #1040AGS AND BOLT-DOWN MANHOLE COVER MODEL #1040ACLGS, OR APPROVED EQUAL. BOLT-DOWN MODEL TO BE USED IN AREAS SUBJECTED TO FLOODING OR AS DIRECTED BY THE AUTHORITY.
2. STEPS TO BE VERTICALLY ALIGNED.
3. THE FRAME AND COVER SHALL BE PROPERLY ALIGNED WITH THE 2 FOOT OPENING OF THE MANHOLE STRUCTURE AND BOLTED IN PLACE.
4. FLAT TOP MANHOLES MAY ONLY BE SUBSTITUTED WITH THE PERMISSION OF THE UTILITY DIRECTOR. WHEN USED, THE ECCENTRIC OPENING MUST LINE UP WITH THE STEPS.
5. SAMPLING MANHOLES IN TRAFFIC AREAS SHALL BE CONSTRUCTED AS PER MANHOLE DETAILS.
6. FLEXIBLE JOINT MANHOLE CONNECTION SHALL BE AS MANUFACTURED BY PRES-SEAL GASKET CORPORATION OR EQUAL.
7. GROUT ANNULAR SPACE BETWEEN PIPE AND PRECAST MANHOLE ON INSIDE OF MANHOLE.

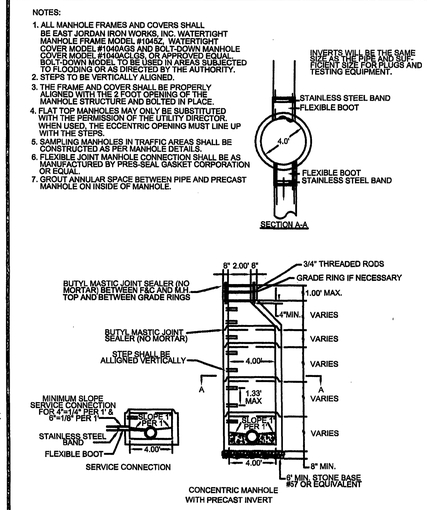

WESTERN VIRGINIA WATER AUTHORITY - CONSTRUCTION STANDARDS

REVISION	DATE		4' STANDARD MANHOLE FOR PIPE 15" OR SMALLER	S-01
07/01/04				

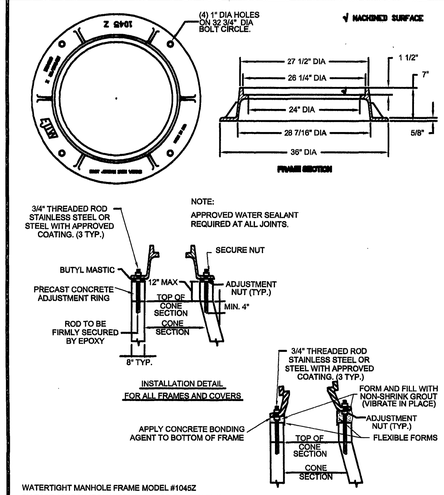

WATERTIGHT MANHOLE FRAME MODEL #1045Z BY EAST JORDAN IRON WORKS, INC. OR EQUIVALENT.

WESTERN VIRGINIA WATER AUTHORITY - CONSTRUCTION STANDARDS

REVISION	DATE		WATERTIGHT MANHOLE FRAME	S-05
07/01/04				

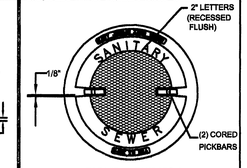

TOP VIEW STANDARD & BOLT DOWN COVER

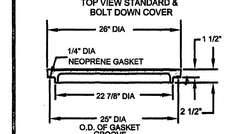

SECTION

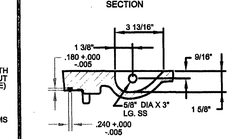

GASKETGROOVE & PICKBAR DETAIL.

STANDARD MANHOLE COVER MODEL #1040AGS BY EAST JORDAN IRON WORKS, INC OR EQUIVALENT.

STANDARD MANHOLE COVER

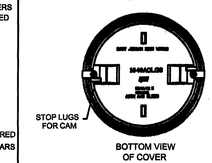

BOTTOM VIEW OF COVER

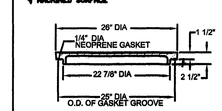

SECTION

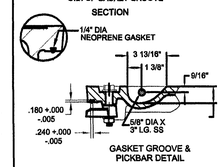

GASKET GROOVE & PICKBAR DETAIL

1. BOLT-DOWN MANHOLE COVER MODEL #1040ACLGS BY EAST JORDAN IRON WORKS, INC OR EQUIVALENT.
2. BOLT-DOWN MANHOLE COVERS TO BE USED IN AREAS SUBJECT TO FLOODING, SUCH AS ALONG STREAM OR CREEK BANKS, OR AS DIRECTED BY THE AUTHORITY.

BOLT-DOWN MANHOLE COVER

WESTERN VIRGINIA WATER AUTHORITY - CONSTRUCTION STANDARDS

REVISION	DATE		WATERTIGHT MANHOLE COVER	S-06
07/01/04				

WVWA ID# 6QPNXU

LUMSDEN ASSOCIATES, P.C.
ENGINEERS-SURVEYORS-PLANNERS
ROANOKE, VIRGINIA
4664 BRAMBLETON AVENUE
P.O. BOX 20669
ROANOKE, VIRGINIA 24018
PHONE: (540) 774-4411
FAX: (540) 772-9445
E-MAIL: MAIL@LUMSDENPC.COM

COMMONWEALTH OF VIRGINIA
THOMAS C. DALE
No. 033002
4/22/05
PROFESSIONAL ENGINEER

WATER AND SEWER DETAILS

SECTION No. 5
THE COACH HOMES OF SOUTHWOOD
PREPARED FOR
BOONE HOMES, INC.
SITUATED IN
THE CITY OF ROANOKE, VIRGINIA

REVISIONS

NO.	DATE	DESCRIPTION
1		
2		
3		
4		
5		

DATE: April 22, 2005
SCALE:
COMMISSION NO: 04-282
SHEET 4 OF 11

04282comp new-ndO2.plt
f:\2004\04282\eng\04282comp new.dwg