NON TRAFFIC INSTALLATION

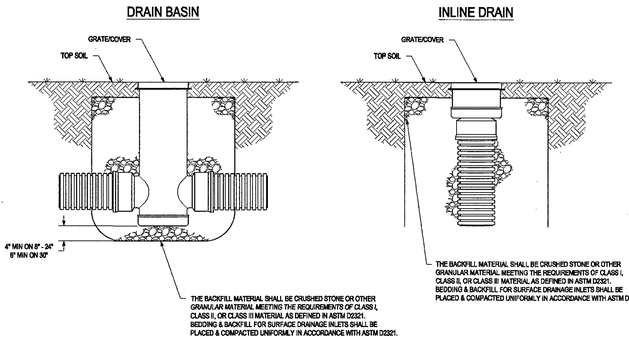

THIS PRINT DISCLOSES SUBJECT MATTER IN WHICH NYLOPLAST HAS PROPRIETARY RIGHTS. THE RECEIPT OR POSSESSION OF THIS PRINT DOES NOT CONVEY, TRANSFER, OR LICENSE THE USE OF THE DESIGN OR TECHNICAL INFORMATION SHOWN HEREIN. REPRODUCTION OF THIS PRINT OR ANY INFORMATION CONTAINED HEREIN, OR MANUFACTURE OF ANY ARTICLE HEREFROM, FOR THE DISCLOSURE TO OTHERS IS FORBIDDEN, EXCEPT BY SPECIFIC WRITTEN PERMISSION FROM NYLOPLAST.

DRAWN BY	CJA	MATERIAL	
DATE	9-30-99		
REVISED BY	MBH	PROJECT NO./NAME	
DATE	03-11-16		
DWG SIZE	A	SCALE 1:35	SHEET 1 OF 1

Nyloplast — 3130 VERONA AVE BUFORD, GA 30518 PHN (770) 932-2443 FAX (770) 932-0489 www.nyloplast-us.com

TITLE: DRAIN BASIN & INLINE DRAIN NON TRAFFIC INSTALLATION

DWG NO. 7001-110-111 REV E

T-MH-2

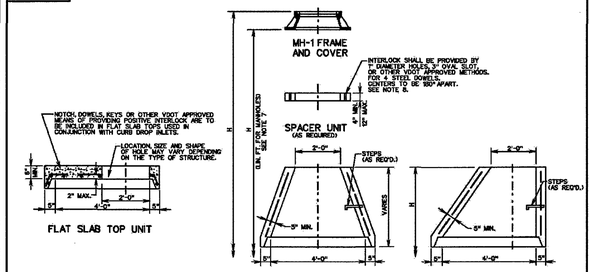

NOTES:

1. SEE GENERAL NOTES FOR ADDITIONAL INFORMATION ON PRECAST, STEP REQUIREMENTS, "H" (LIN. FT.) FOR MANHOLES DIMENSION, ETC.
2. ALL SPACER UNITS, FLAT SLAB TOPS, AND TAPER UNITS ARE TO BE IN ACCORDANCE WITH THE REQUIREMENTS OF AASHTO M199.
3. CONCRETE SHALL BE 4000 PSI.
4. FOR STEP DETAILS SEE STANDARD ST-1.
5. DIMENSIONS SHOWN ARE MINIMUM. ACTUAL DIMENSIONS MAY VARY WITH MANUFACTURER.
6. SPACER UNITS SHOWN HEREON ARE ALSO KNOWN AS "GRADE RINGS" OR ADJUSTMENT RINGS".
7. WHEN SPACER UNITS ARE REQUIRED, "H" IS TO BE MEASURED FROM THE TOP OF THE UPPERMOST SPACER.
8. SPACER UNIT IS TO BE DOWELED OR MORTARED TO TAPER UNIT OR FLAT SLAB TOP.

VDOT ROAD AND BRIDGE STANDARDS

SHEET 1 OF 1	REVISION DATE
103.09	

STANDARD PRECAST MANHOLE TOP UNITS

VIRGINIA DEPARTMENT OF TRANSPORTATION

SPECIFICATION REFERENCE
105
302

MH-2

FOR DETAILS OF ALL COMPONENT PARTS AND "GENERAL NOTES- PRECAST" SEE SHEETS 103.01-103.11

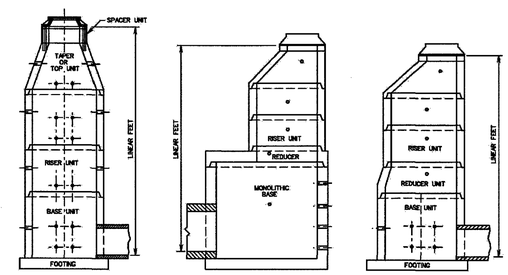

SPECIFICATION REFERENCE
105
302

PRECAST MANHOLE

VIRGINIA DEPARTMENT OF TRANSPORTATION

VDOT ROAD AND BRIDGE STANDARDS

REVISION DATE	SHEET 1 OF 1
	106.07

NYLOPLAST 30" DRAIN BASIN: 2830AG _ _X

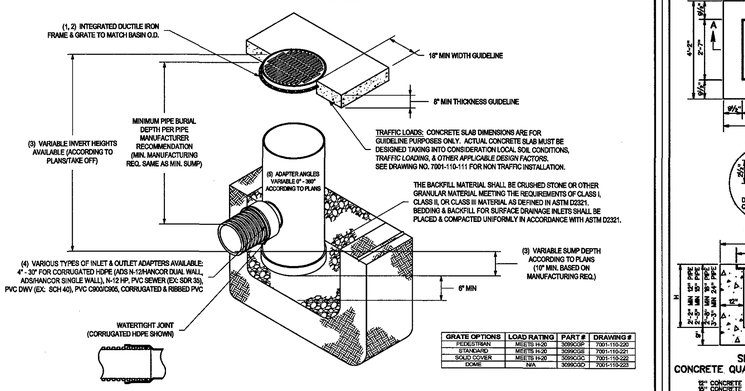

GRATE OPTIONS	LOAD RATING	PART #	DRAWING #
PEDESTRIAN	MEETS H-20	3090GOP	7001-110-220
STANDARD	MEETS H-20	3090GOS	7001-110-221
SOLID COVER	MEETS H-20	3090GOC	7001-110-222
DOME	N/A	3090GOD	7001-110-223

1 - GRATE/SOLID COVER SHALL BE DUCTILE IRON PER ASTM A536 GRADE 70-50-05.
2 - FRAMES SHALL BE DUCTILE IRON PER ASTM A536 GRADE 70-50-05.
3 - DRAIN BASIN TO BE CUSTOM MANUFACTURED ACCORDING TO PLAN DETAILS. RISERS ARE NEEDED FOR BASINS OVER 84" DUE TO SHIPPING RESTRICTIONS. SEE DRAWING NO. 7001-110-005.
4 - DRAINAGE CONNECTION STUB JOINT TIGHTNESS SHALL CONFORM TO ASTM D3212 FOR CORRUGATED HDPE (ADS N-12/HANCOR DUAL WALL), N-12 HP, & PVC SEWER (8"- 24").
5 - ADAPTERS CAN BE MOUNTED ON ANY ANGLE 0° TO 360°. TO DETERMINE MINIMUM ANGLE BETWEEN ADAPTERS SEE DRAWING NO. 7001-110-012.

THIS PRINT DISCLOSES SUBJECT MATTER IN WHICH NYLOPLAST HAS PROPRIETARY RIGHTS. THE RECEIPT OR POSSESSION OF THIS PRINT DOES NOT CONFER, TRANSFER, OR LICENSE THE USE OF THE DESIGN OR TECHNICAL INFORMATION SHOWN HEREIN. REPRODUCTION OF THIS PRINT OR ANY INFORMATION CONTAINED HEREIN, OR MANUFACTURE OF ANY ARTICLE HEREFROM, FOR THE DISCLOSURE TO OTHERS IS FORBIDDEN, EXCEPT BY SPECIFIC WRITTEN PERMISSION FROM NYLOPLAST.

DRAWN BY	EBC	MATERIAL	
DATE	04-03-06		
REVISED BY	MBH	PROJECT NO./NAME	
DATE	03-14-16		
DWG SIZE	A	SCALE 1:40	SHEET 1 OF 1

Nyloplast — 3130 VERONA AVE BUFORD, GA 30518 PHN (770) 932-2443 FAX (770) 932-0489 www.nyloplast-us.com

TITLE: 30 IN DRAIN BASIN QUICK SPEC INSTALLATION DETAIL

DWG NO. 7001-110-193 REV G

DI-1

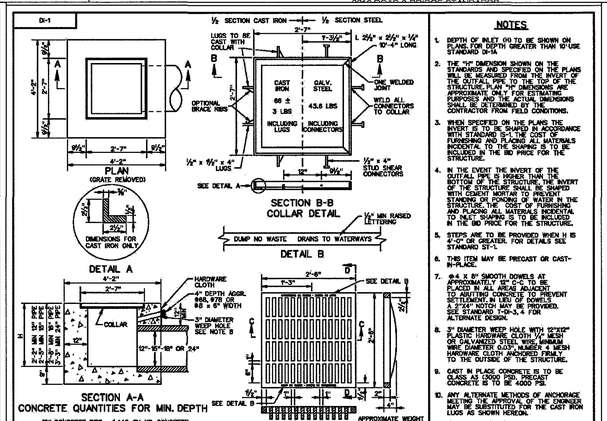

CONCRETE QUANTITIES FOR MIN. DEPTH

12" CONCRETE PIPE - 1.440 CU. YD. CONCRETE
15" CONCRETE PIPE - 1.628 CU. YD. CONCRETE
30" CONCRETE PIPE - 1.820 CU. YD. CONCRETE
24" CONCRETE PIPE - 1.917 CU. YD. CONCRETE

ADD 0.469 CU. YD. PER ADDITIONAL FOOT OF DEPTH.

NOTES

1. DEPTH OF INLET OR TO BE SHOWN ON PLANS. FOR DEPTH GREATER THAN 10' USE STANDARD DI-1A.
2. THE "H" DIMENSION SHOWN ON THE STANDARDS AND SPECIFIED ON THE PLANS WILL BE MEASURED FROM THE INVERT OF THE OUTFALL PIPE TO THE TOP OF THE STRUCTURE. PLAN "H" DIMENSIONS ARE APPROXIMATE ONLY FOR ESTIMATING PURPOSES. THE ACTUAL "H" DIMENSIONS SHALL BE DETERMINED BY THE CONTRACTOR FROM FIELD CONDITIONS.
3. WHEN SPECIFIED ON THE PLANS THE INVERT IS TO BE SHAPED IN ACCORDANCE WITH STANDARD PC-1. ALL MATERIALS INCIDENTAL TO THE SHAPING IS TO BE INCLUDED IN THE BID PRICE FOR THE STRUCTURE.
4. IN THE EVENT THE INVERT OF THE OUTFALL PIPE IS SUNKEN BELOW THE BOTTOM OF THE STRUCTURE, THE INVERT OF THE STRUCTURE SHALL BE SHAPED WITH CEMENT MORTAR TO PREVENT STANDING OR PONDING OF WATER IN THE STRUCTURE. THE COST OF FURNISHING AND PLACING ALL MATERIALS INCIDENTAL TO THE SHAPING SHALL BE INCLUDED IN THE BID PRICE FOR THE STRUCTURE.
5. STEPS ARE TO BE PROVIDED WHEN H IS 4'-0" OR GREATER. FOR DETAILS SEE STANDARD ST-1.
6. THIS ITEM MAY BE PRECAST OR CAST-IN-PLACE.
7. #4 X 8" SMOOTH DOWELS AT APPROXIMATELY 18" C-C TO BE PLACED IN ALL AREAS ADJACENT TO ADJOINING CONCRETE TO PREVENT DIFFERENTIAL SETTLEMENT. A TITAN 30 MAY BE PROVIDED. SEE STANDARD T-10-3 & 7 FOR ALTERNATE DESIGN.
8. 3" DIAMETER WEEP HOLE WITH 12"x12" PLASTIC FILTER CLOTH (12" SQ.) OR SILVER/GOLD STEEL WOOL MINIMUM WIRE DIAMETER 0.013", NUMBER 4 MESH HARDWARE CLOTH ANCHORED FIRMLY TO THE OUTSIDE OF THE STRUCTURE.
9. CAST IN PLACE CONCRETE IS TO BE CLASS A4 UNLESS OTHERWISE NOTED. CONCRETE IS TO BE 4000 PSI.
10. ANY ALTERNATE METHODS OF ANCHORAGE MEETING THE APPROVAL OF THE ENGINEER MAY BE SUBSTITUTED FOR THE CAST IRON LUGS AS SHOWN HEREON.
11. DUMP NO WASTE DRAINS TO WATERWAY LETTERING IS REQUIRED ON ALL DI-1 GRATES. LOCATION OF LETTERING MAY VARY BY MANUFACTURER.

VDOT ROAD AND BRIDGE STANDARDS

SHEET 1 OF 1	REVISION DATE
104.01	

STANDARD DROP INLET

12" - 24" PIPE: MAXIMUM DEPTH (H) = 10'

VIRGINIA DEPARTMENT OF TRANSPORTATION

SPECIFICATION REFERENCE
233
302

ASPHALT INSTALLATION

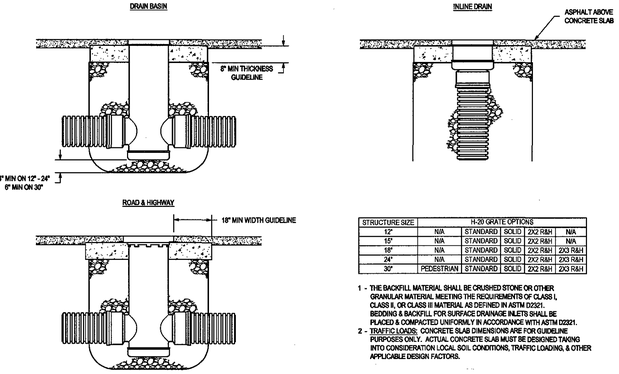

STRUCTURE SIZE	H-20 GRATE OPTIONS			
12"	N/A	STANDARD	SOLID	2X2 R&H	N/A
15"	N/A	STANDARD	SOLID	2X2 R&H	N/A
18"	N/A	STANDARD	SOLID	2X2 R&H	2X3 R&H
24"	N/A	STANDARD	SOLID	2X2 R&H	2X3 R&H
30"	PEDESTRIAN	STANDARD	SOLID	2X2 R&H	2X3 R&H

1 - THE BACKFILL MATERIAL SHALL BE CRUSHED STONE OR OTHER GRANULAR MATERIAL MEETING THE REQUIREMENTS OF CLASS I, CLASS II, OR CLASS III MATERIAL AS DEFINED IN ASTM D2321. BEDDING & BACKFILL FOR SURFACE DRAINAGE INLETS SHALL BE PLACED & COMPACTED UNIFORMLY IN ACCORDANCE WITH ASTM D2321.

2 - TRAFFIC LOADS: CONCRETE SLAB DIMENSIONS ARE FOR GUIDELINE PURPOSES ONLY. ACTUAL CONCRETE SLAB MUST BE DESIGNED TAKING INTO CONSIDERATION LOCAL SOIL CONDITIONS, TRAFFIC LOADING, & OTHER APPLICABLE DESIGN FACTORS.

THIS PRINT DISCLOSES SUBJECT MATTER IN WHICH NYLOPLAST HAS PROPRIETARY RIGHTS. THE RECEIPT OR POSSESSION OF THIS PRINT DOES NOT CONFER, TRANSFER, OR LICENSE THE USE OF THE DESIGN OR TECHNICAL INFORMATION SHOWN HEREIN. REPRODUCTION OF THIS PRINT OR ANY INFORMATION CONTAINED HEREIN, OR MANUFACTURE OF ANY ARTICLE HEREFROM, FOR THE DISCLOSURE TO OTHERS IS FORBIDDEN, EXCEPT BY SPECIFIC WRITTEN PERMISSION FROM NYLOPLAST.

DRAWN BY	EBC	MATERIAL	
DATE	4-4-06		
REVISED BY	MBH	PROJECT NO./NAME	
DATE	03-14-16		
DWG SIZE	A	SCALE 1:30	SHEET 1 OF 1

Nyloplast — 3130 VERONA AVE BUFORD, GA 30518 PHN (770) 932-2443 FAX (770) 932-0489 www.nyloplast-us.com

TITLE: DRAIN BASIN, INLINE DRAIN, & ROAD & HIGHWAY (H-20 TRAFFIC LOAD) ASPHALT INSTALLATION DETAIL

DWG NO. 7001-110-195 REV E

ST-1

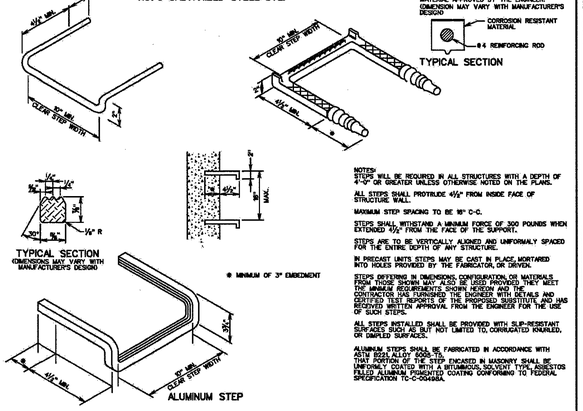

NOTES:
STEPS WILL BE REQUIRED IN ALL STRUCTURES WITH A DEPTH OF 4'-0" OR GREATER UNLESS OTHERWISE NOTED ON THE PLANS.

ALL STEPS SHALL PROTRUDE 4½" FROM INSIDE FACE OF STRUCTURE WALL.

MAXIMUM STEP SPACING TO BE 16" C-C.

STEPS SHALL WITHSTAND A MINIMUM FORCE OF 300 POUNDS WHEN EXTENDED 4½" FROM THE FACE OF THE SUPPORT.

STEPS ARE TO BE VERTICALLY ALIGNED AND UNIFORMALY SPACED FOR THE ENTIRE DEPTH OF ANY STRUCTURE.

IN PRECAST UNITS STEPS MAY BE CAST IN PLACE, MORTARED INTO HOLES PROVIDED BY THE FABRICATOR, OR DRIVEN.

STEPS DIFFERING IN DIMENSIONS, CONFIGURATIONS, OR MATERIALS FROM THOSE SHOWN MAY ALSO BE USED PROVIDED THEY MEET THE MINIMUM REQUIREMENTS SHOWN HEREON AND THE CONTRACTOR HAS FURNISHED THE ENGINEER WITH DETAILS AND CERTIFIED TEST REPORTS OF THE PROPOSED SUBSTITUTE AND HAS RECEIVED WRITTEN APPROVAL FROM THE ENGINEER FOR THE USE OF SUCH STEPS.

ALL STEPS INSTALLED SHALL BE PROVIDED WITH SLIP-RESISTANT SURFACES SUCH AS BUT NOT LIMITED TO, CORRUGATED KNURLED, OR DIMPLED SURFACES.

ALUMINUM STEPS SHALL BE FABRICATED IN ACCORDANCE WITH ASTM B221 ALLOY 6061-T6.
THAT PORTION OF THE STEP EXCASED IN MASONRY SHALL BE UNIFORMLY COATED WITH A BITUMINOUS, SOLVENT TYPE, ASBESTOS FELTED ALUMINUM PAINTED COATING CONFORMING TO FEDERAL SPECIFICATION TT-C-506/BBA.

SPECIFICATION REFERENCE

STANDARD STEP

VIRGINIA DEPARTMENT OF TRANSPORTATION

VDOT ROAD AND BRIDGE STANDARDS

REVISION DATE	SHEET 1 OF 1
	106.09

PS-1

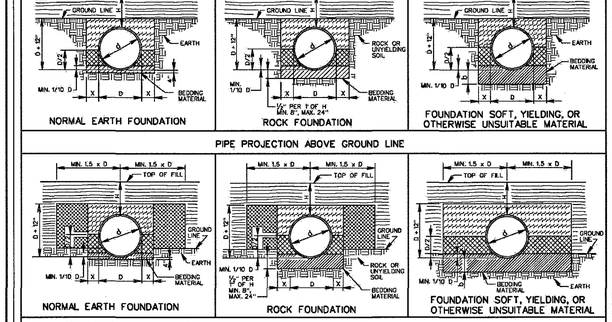

BEDDING MATERIAL IN ACCORDANCE WITH SECTION 302 OF THE ROAD AND BRIDGE SPECIFICATIONS.

CLASS I BACKFILL MATERIAL IN ACCORDANCE WITH SECTION 302 OF THE ROAD AND BRIDGE SPECIFICATIONS.

CRUSHED CLASS CONFORMING TO THE SIZE REQUIREMENTS FOR CRUSHER RUN AGGREGATE SIZE 25 AND 26 MAY BE USED IN PLACE OF CLASS I BACKFILL.

FOR ALL OTHER PIPE REGULAR BACKFILL MATERIAL IN ACCORDANCE WITH SECTION 302 OF THE ROAD AND BRIDGE SPECIFICATIONS.

EMBANKMENT

REGULAR BACKFILL MATERIAL IN ACCORDANCE WITH SECTION 302 OF THE ROAD AND BRIDGE SPECIFICATIONS.

NOTES:

FOR GENERAL NOTES ON PIPE BEDDING, SEE INSTALLATION OF PIPE CULVERTS AND STORM SEWERS GENERAL NOTES ON SHEET 107.02.

CRUSHED CLASS CONFORMING TO THE SIZE REQUIREMENTS FOR CRUSHER RUN AGGREGATE SIZE 25 AND 26 MAY BE USED IN PLACE OF CLASS I BACKFILL.

VDOT ROAD AND BRIDGE STANDARDS

SHEET 1 OF 4	REVISION DATE
107.01	07/12

INSTALL. OF PIPE CULVERTS AND STORM SEWERS CIRC. PIPE BEDDING AND BACKFILL - METHOD "A"

VIRGINIA DEPARTMENT OF TRANSPORTATION

SPECIFICATION REFERENCE
302
303

PS-1

GENERAL

1. LENGTH OF PIPE BEDDING SHALL BE USED FOR ALL TYPES OF PIPE CULVERTS WITHIN THE APPLICABLE HEIGHT OF COVER RANGE NOTED IN THE STANDARD PC-1 TABLES UNLESS OTHERWISE NOTED ON THE PLANS.
2. H = HEIGHT OF COVER MEASURED FROM TOP OF CULVERT TO FINISHED GRADE.
3. b = EXCAVATION DEPTH AS SHOWN ON PLANS OR TO FIRM BEARING SOIL.

CIRCULAR PIPE

1. D = OUTSIDE DIAMETER OF PIPE.
2. d = INSIDE DIAMETER OF PIPE.
3. X = WIDTH OF CLASS I BACKFILL MATERIAL BEYOND THE EXTREMITY OF THE PIPE.
   X = 12" WHERE S IS LESS THAN 36".
   X = 18" WHERE S IS 36" AND GREATER.
4. WHERE DIRECTED BY THE ENGINEER BEDDING MATERIAL MAY BE ELIMINATED FOR NORMAL EARTH FOUNDATIONS UNDER ROUTINE ENTRANCE PIPE (EXCEPT PLASTIC PIPE) 30" AND LESS IN DIAMETER WITH HEIGHT OF COVER 10' OR LESS.
5. REGULAR BACKFILL MATERIAL MAY BE USED IN LIEU OF CLASS I BACKFILL MATERIAL FOR ALL FOUNDATION TYPES FOR ROUTINE ENTRANCE PIPE (EXCEPT PLASTIC PIPE) 30" AND LESS IN DIAMETER WITH HEIGHT OF COVER 10' OR LESS.
6. BEDDING MATERIAL AND CLASS I BACKFILL MATERIAL MAY BE ELIMINATED FOR SHOULDER SLOT INLET (DI-13) OUTLET PIPES INSTALLATIONS.

ELLIPTICAL PIPE

1. S_1 = OUTSIDE SPAN DIMENSION OF PIPE.
2. S_2 = INSIDE SPAN DIMENSION OF PIPE.
3. R = OUTSIDE RISE DIMENSION OF PIPE.
4. X = WIDTH OF CLASS I BACKFILL MATERIAL BEYOND THE EXTREMITY OF THE PIPE.
   X = 12" WHERE S_2 IS LESS THAN 36".
   X = 18" WHERE S_2 IS 36" AND GREATER
5. WHERE DIRECTED BY THE ENGINEER BEDDING MATERIAL MAY BE ELIMINATED FOR NORMAL EARTH FOUNDATIONS UNDER ROUTINE ENTRANCE PIPE WHERE S_2 IS 30" OR LESS AND HEIGHT OF COVER 10' OR LESS.
6. REGULAR BACKFILL MATERIAL MAY BE USED IN LIEU OF CLASS I BACKFILL MATERIAL FOR ALL FOUNDATION TYPES FOR ROUTINE ENTRANCE PIPE WHERE S_2 IS 30" OR LESS AND HEIGHT OF COVER 10' OR LESS.

PIPE ARCH

1. S = SPAN DIMENSION OF PIPE.
2. R = RISE DIMENSION OF PIPE.
3. B = SEE PC-1 TABLE FOR APPLICABLE PIPE MATERIAL
4. x = WIDTH OF CLASS I BACKFILL MATERIAL BEYOND THE EXTREMITY OF THE PIPE.
   x = 12" WHERE S_2 IS LESS THAN 36".
   x = 18" WHERE S_2 IS 36" AND GREATER
5. WHERE DIRECTED BY THE ENGINEER BEDDING MATERIAL MAY BE ELIMINATED FOR NORMAL EARTH FOUNDATIONS UNDER ROUTINE ENTRANCE PIPE WHERE S_2 IS 30" OR LESS AND HEIGHT OF COVER 10' OR LESS.
6. REGULAR BACKFILL MATERIAL MAY BE USED IN LIEU OF CLASS I BACKFILL MATERIAL FOR ALL FOUNDATION TYPES FOR ROUTINE ENTRANCE PIPE WHERE S_2 IS 30" OR LESS AND HEIGHT OF COVER 10' OR LESS.

City of Roanoke
Planning, Building, & Development
COMPREHENSIVE DEVELOPMENT PLAN

FIELD REVISION
APPROVED
by Adrian Gilbert 12/26/2017

SPECIFICATION REFERENCE

302
303

INSTALLATION OF PIPE CULVERTS & STORM SEWERS GENERAL NOTES

VIRGINIA DEPARTMENT OF TRANSPORTATION

VDOT ROAD AND BRIDGE STANDARDS

REVISION DATE	SHEET 1 OF 1
	107.02

parker DESIGN GROUP
ENGINEERS • SURVEYORS • PLANNERS • LANDSCAPE ARCHITECTS
2122 Carolina Ave, SW
Roanoke, VA 24014
Ph: 540-387-1153
Fax: 540-389-5767
1915-B W. Cary Street
Richmond, VA 23220
Phone: 804-358-2947
Fax: 804-359-9645
www.parkerdg.com

These documents are the property of Parker Design Group(PDG) and may not be reproduced or used without the express permission of PDG. Any reuse of these documents without authorization of PDG will be at the sole risk of the individual or entity utilizing said documents.

COMMONWEALTH OF VIRGINIA
CLYDE D. SPENCER
Lic. No. 35456
12/14/2017
PROFESSIONAL ENGINEER

STEEL DYNAMICS
Spare Parts Warehouse 2017
Tax # 6021103
City of Roanoke, Virginia

REVISIONS:
Rev. 1: per City Comments 2017-09-13
Rev. 1: Completed 2017-09-15
Rev. 2: Client Information
Rev. 2: Completed 2017-09-27
Rev. 3: Revised for consistency
Rev. 3: Completed 2017-10-16
Rev. 4: Revised for Water & Dev.
Rev. 4: Completed 2017-11-01
Field Rev. #1: Utility Conflicts
Field Rev. #1: Completed 2017-12-14

DESIGNED BY: CDS
DRAWN BY: CDS
CHECKED BY: SRB

DATE: September 18, 2017

SHEET TITLE: Storm Details

SCALE:

SHEET NO. C09

Path: V:\2017 Projects\17-0043.03 Steel Dynamics\5 DWG\Active Engineering Production\17-0043.03 Cbz Cover-Notes-Details.dwg