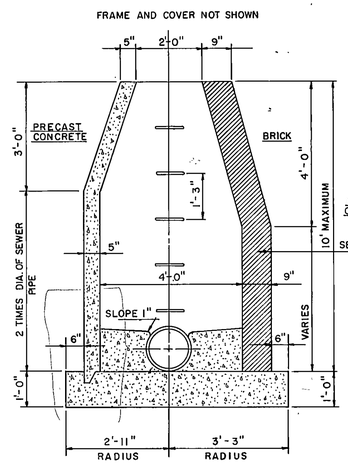

LONGITUDINAL SECTION

NOTE
REFER TO SPECIFICATIONS FOR MANHOLES CONSTRUCTED OF CONCRETE MANHOLE BLOCK.

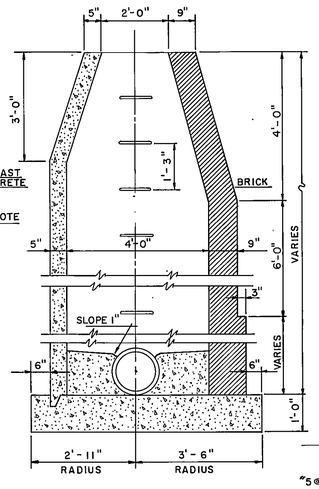

LONGITUDINAL SECTION

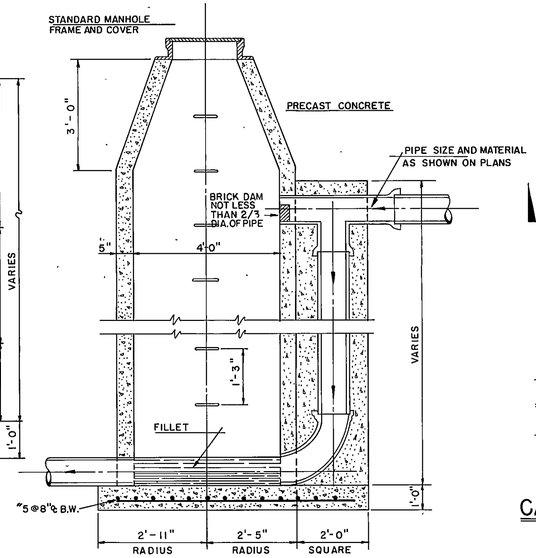

LONGITUDINAL SECTION

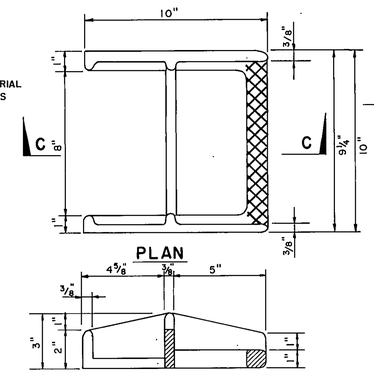

CAST IRON MANHOLE STEPS

MANHOLES
SCALE: 3" = 1'-0"

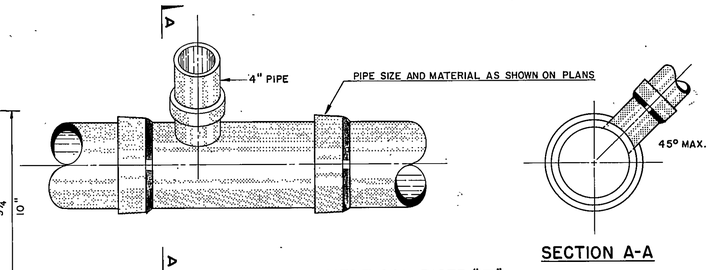

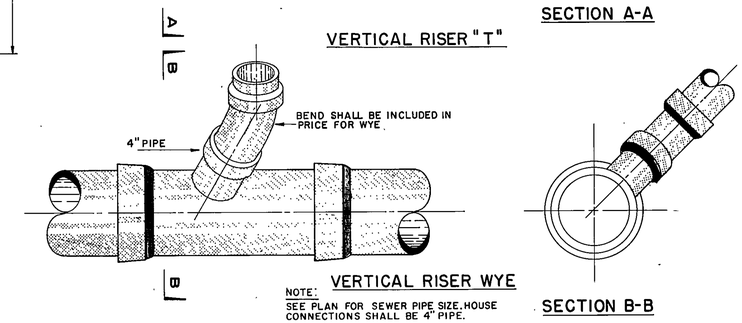

VERTICAL RISER WYE

NOTE:
SEE PLAN FOR SEWER PIPE SIZE, HOUSE CONNECTIONS SHALL BE 4" PIPE.

SERVICE CONNECTION DETAIL

NOT TO SCALE

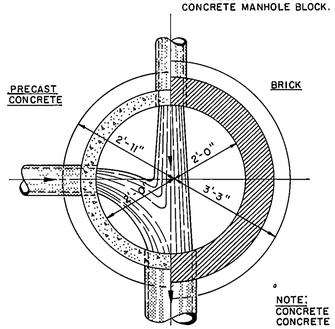

MANHOLE 0' TO 10'

TYPE "A"

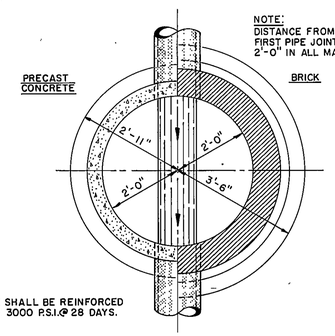

NOTE:
DISTANCE FROM MANHOLE TO FIRST PIPE JOINT SHALL BE 2'-0" IN ALL MANHOLES.

NOTE:
CONCRETE SHALL BE REINFORCED CONCRETE 3000 P.S.I. @ 28 DAYS.

MANHOLE OVER 10'

TYPE "A"

MANHOLE DETAILS

SCALE 1/2" = 1'-0"

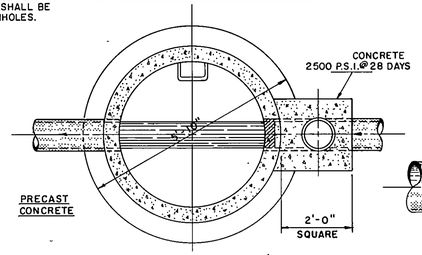

DROP MANHOLE

TYPE "B"

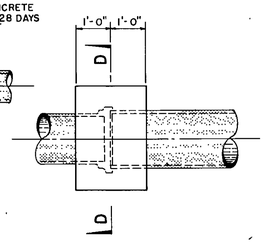

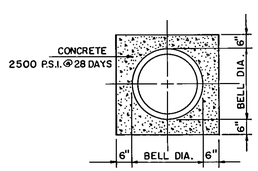

SECTION D-D

CONCRETE ENCASEMENT

NOT TO SCALE

USE FOR JOINING DIFFERENT TYPES OF PIPE

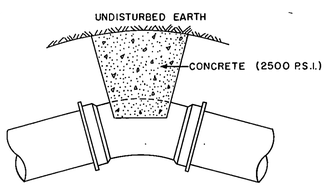

THRUST BLOCK

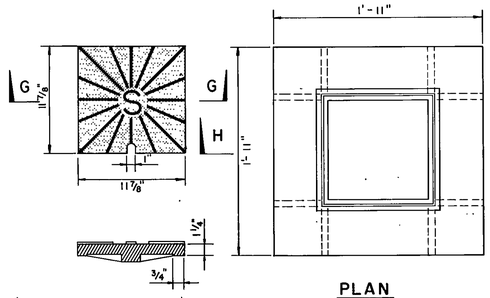

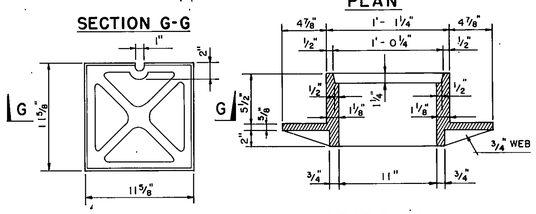

INSPECTION BOX FRAME AND COVER

SCALE 1 1/2" = 1'-0"

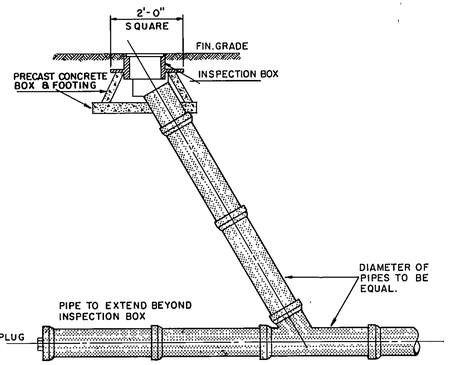

CLEANOUT CONNECTION DETAIL

NOT TO SCALE

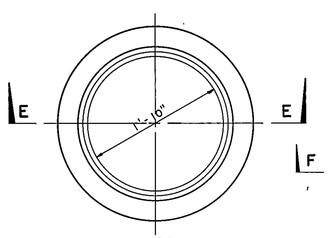

PLAN

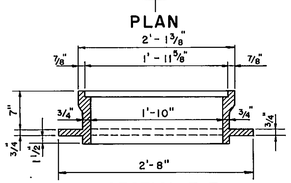

SECTION E-E

PLAN

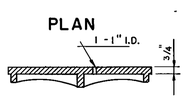

SECTION F-F

STANDARD MANHOLE FRAME & COVER

SCALE: 1" = 1'-0"

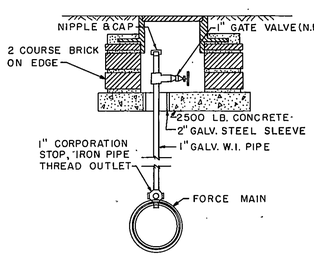

AIR VENT DETAIL

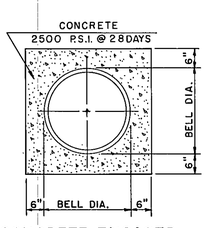

CONCRETE ENCASED PIPE

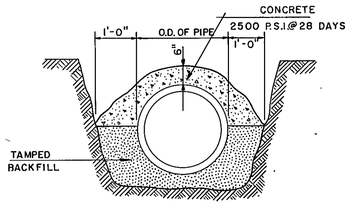

CONCRETE CAP

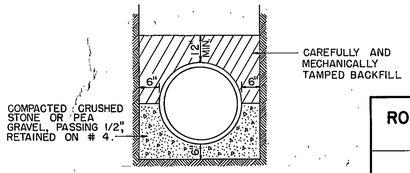

STANDARD GRAVEL BEDDING

CONSTRUCTION DETAILS

NOT TO SCALE

COMMONWEALTH OF VIRGINIA
WILLIAM E. CONKLIN, JR.
No. 2923
CERTIFIED PROFESSIONAL ENGINEER

AS BUILT

ROANOKE COUNTY PUBLIC SERVICE AUTHORITY
ROANOKE COUNTY, VIRGINIA

SANITARY SEWERAGE SYSTEM
TINKER CREEK INTERCEPTOR
PROJECT No. 71-2-S
DETAILS

DES: W.C.O.	LANGLEY, McDONALD and OVERMAN	SCALE: AS SHOWN
DR: G.E.R.	CONSULTING ENGINEERS	DATE: 7/15/71
CK: W.E.C.	NORFOLK, VIRGINIA	SHEET 10 OF 10

3397