1. WATERTIGHT MANHOLE FRAME MODEL #1045Z BY EAST JORDAN IRON WORKS, INC. OR EQUIVALENT.
2. HDPE ADJUSTMENT RINGS SHALL MEET H-20 LOAD RATING, AND SHALL BE INTERLOCKING OR UTILIZE BUTYL MASTIC JOINT SEALANT BETWEEN EACH RING TO FORM A WATERTIGHT JOINT.
3. CONCRETE ADJUSTMENT RINGS SHALL MEET H-20 LOAD RATING AND UTILIZE BUTYL MASTIC JOINT SEALANT BETWEEN EACH RING AND FRAME AN COVER TO FORM A WATERTIGHT JOINT.
4. FRAME HEIGHT SHALL BE 7" FOR BURIED LOCATIONS AND 4" FOR EXPOSED LOCATIONS.

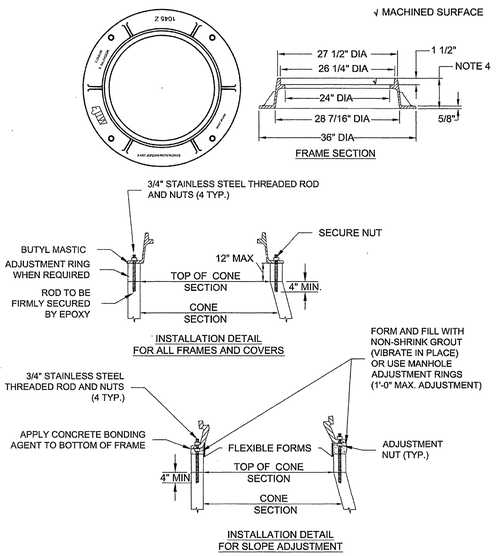

WESTERN VIRGINIA REGIONAL - CONSTRUCTION DETAIL

WATERTIGHT MANHOLE FRAME — S-4 — 01/01/12

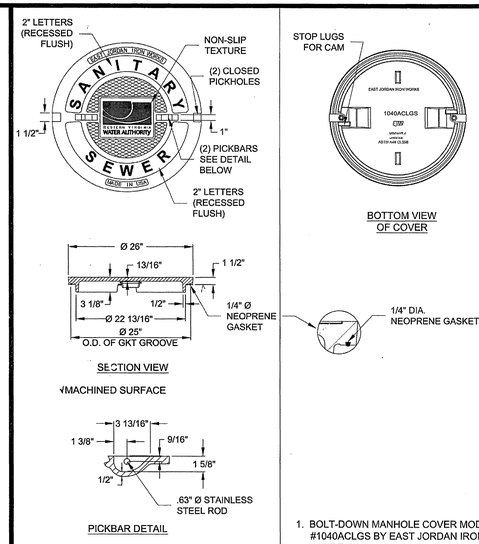

STANDARD MANHOLE COVER MODEL #1040AGS BY EAST JORDAN IRON WORKS, INC OR EQUIVALENT.

STANDARD MANHOLE COVER

1. BOLT-DOWN MANHOLE COVER MODEL #1040ACLGS BY EAST JORDAN IRON WORKS, INC OR EQUIVALENT.
2. BOLT-DOWN MANHOLE COVERS TO BE USED IN AREAS SUBJECT TO FLOODING, SUCH AS ALONG STREAM OR CREEK BANKS, WITHIN 10 YEAR FLOOD PLAIN, OR AS DIRECTED BY THE PARTICIPATING UTILITY.

BOLT-DOWN MANHOLE COVER

WESTERN VIRGINIA REGIONAL - CONSTRUCTION DETAIL

WATERTIGHT MANHOLE COVER — S-5 — 01/01/12

1. SEE DETAIL S-1.

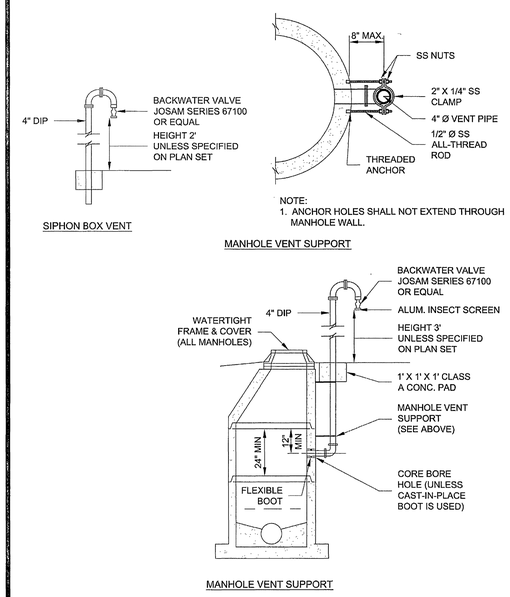

WESTERN VIRGINIA REGIONAL - CONSTRUCTION DETAIL

MANHOLE VENT - ADJACENT — S-12 — 01/01/12

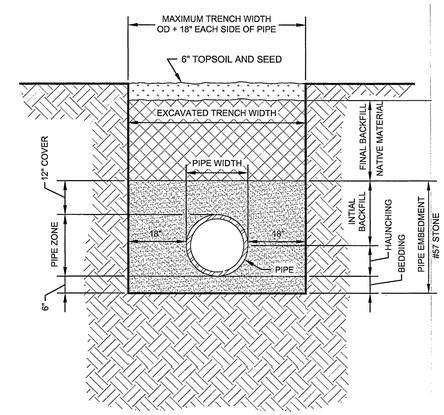

NOTES:

1. ALL BEDDING, HAUNCHING, AND INITIAL BACKFILL SHALL BE #57 STONE COMPACTED AS SPECIFIED.

54-INCH SEWER PIPE TRENCH BEDDING AND BACKFILL

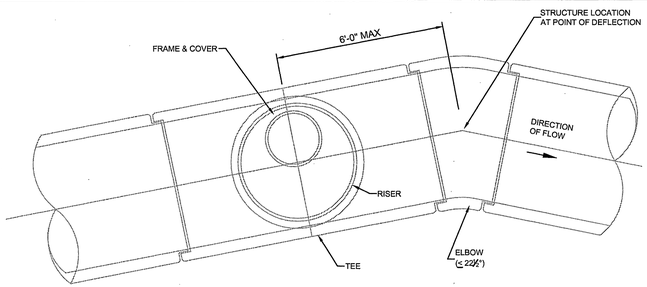

DEFLECTION ≤ 22½°

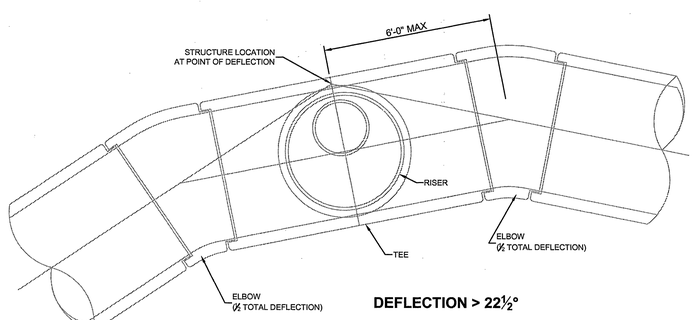

DEFLECTION > 22½°

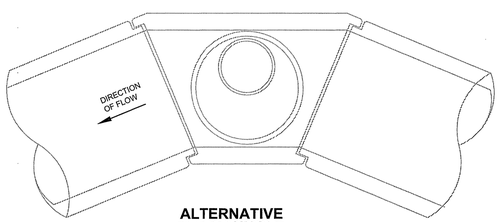

ALTERNATIVE TEE MANHOLE

TEE MANHOLE
N.T.S.

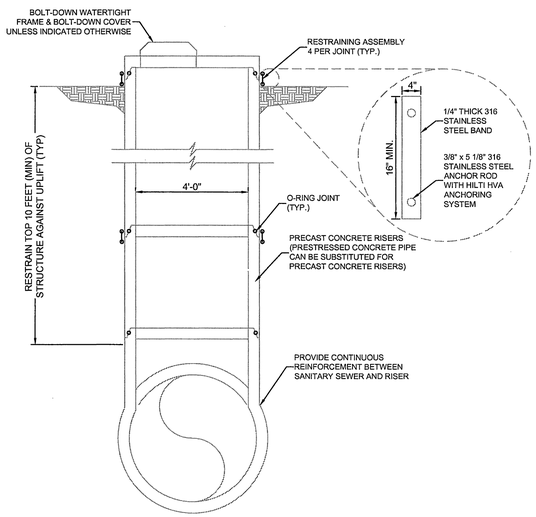

ALL TEE MANHOLES SHALL BE PRECAST CONCRETE WITH T-LOCK LINING

URS
4905 DICKENS ROAD, SUITE 106
RICHMOND, VIRGINIA 23230
(804)965-9000 www.URScorp.com

WESTERN VIRGINIA WATER AUTHORITY

TINKER CREEK 54-INCH PARALLEL RELIEF SEWER

STANDARD DETAILS

COMMONWEALTH OF VIRGINIA — THOMAS JAMES DILEGO — Lic. No. 045104 — PROFESSIONAL ENGINEER

DATE:	NOVEMBER 2012
JOB NO.:	11658086
LEAD ENGINEER:	tjd
DRAWN BY:	wlj
CHECKED:	tkf
REVISION:	

G-3

SHEET 3 OF 10

FILE NAME: $(getvar, "dwgprefix")$(getvar, "dwgname") LAYOUT NAME: $(GETVAR, "CTAB") PLOTTED:$(edtime, 0, D)D:" MONTH (D)" YYYY – HAMBerry(pm)