MAIN LINE VALVE INSTALLATION

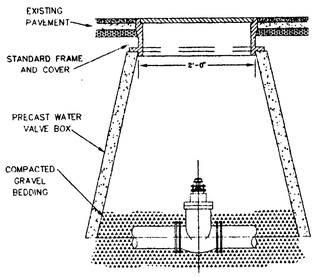

WATER VALVE VAULT OPTIONAL PRECAST CONCRETE

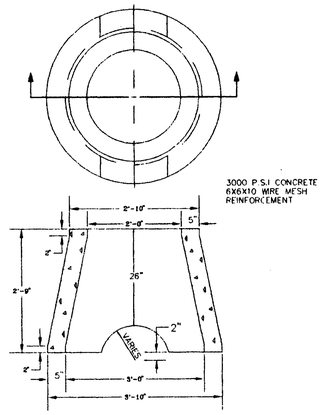

WATER METER BOX CAST IRON FRAME AND COVER

NOTE: ALL CASTINGS SHALL BE COMMERCIALLY MACHINABLE. THE FOLLOWING PORTIONS OF COVER SEATS AND COVERS SHALL BE MACHINED: FRAME – HORIZONTAL AND VERTICAL SURFACES OF COVER SEAT AND THE VERTICAL COVER – UNDER SURFACE WHICH RESTS UPON THE COVER SEAT AND THE VERTICAL SURFACE WHICH FITS UPON THE COVER SEAT. AFTER MACHINING, COVER SHALL SEAT IN ANY POSITION WITHOUT ROCKING AND BE FLUSH WITH TOP OF FRAME. SIDE PLAY OF COVER SHALL NOT BE MORE THAN 1/4". LETTERS ON COVER SHALL BE 1" HIGH AND 3/16" THICK.

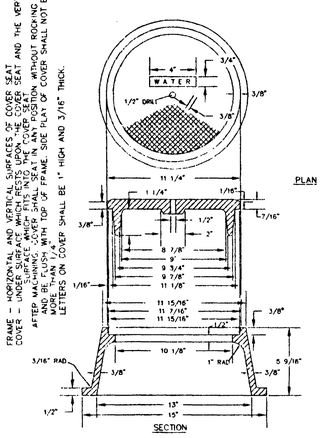

WATER VALVE NO. 5 BOX

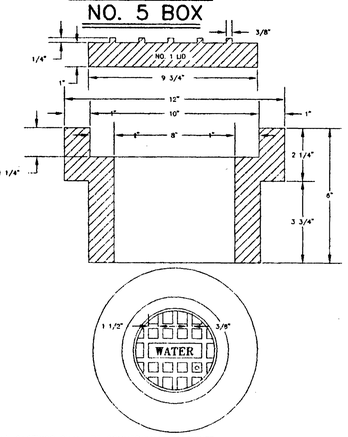

NOTE: ALL CASTINGS SHALL BE COMMERCIALLY MACHINED. THE FOLLOWING PORTIONS OF THE COVER SEATS AND COVERS SHALL BE MACHINED
FRAME – HORIZONTAL AND VERTICAL SURFACES OF COVER SEAT.
COVER – UNDER SURFACE WHICH REST UPON THE COVER SEAT AND THE VERTICAL SURFACE WHICH FITS INTO THE COVER SEAT.
AFTER MACHINING, COVER SHALL SEAT IN ANY POSITION WITHOUT ROCKING AND BE FLUSH WITH TOP OF FRAME. SIDE PLAY OF COVER SHALL NOT BE MORE THAN 1/4".
LETTERS ON COVER SHALL BE 1" HIGH AND 3/16" THICK. NOVEMBER 10, 1964.

WATER VALVE NO. 6 BOX

NOTE: ALL CASTINGS SHALL BE COMMERCIALLY MACHINABLE. THE FOLLOWING PORTIONS OF COVER SEATS AND COVERS SHALL BE MACHINED: FRAME – HORIZONTAL AND VERTICAL SURFACES OF COVER SEAT AND THE COVER – UNDER SURFACE WHICH RESTS UPON THE COVER SEAT AND THE VERTICAL SURFACE WHICH FITS INTO THE COVER SEAT. AFTER MACHINING COVER SHALL SEAT IN ANY POSITION WITHOUT ROCKING AND BE FLUSH WITH TOP OF FRAME. SIDE PLAY OF COVER SHALL NOT BE MORE THAN 1/4".

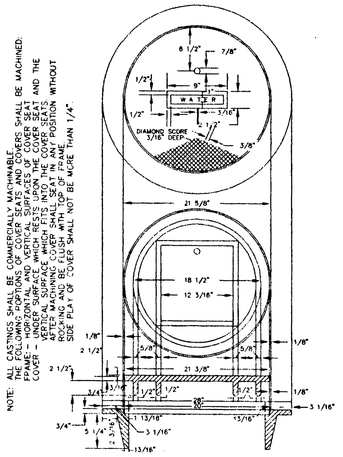

UTILITY BEDDING AND PROTECTION WATER AND SANITARY SEWER FACILITIES

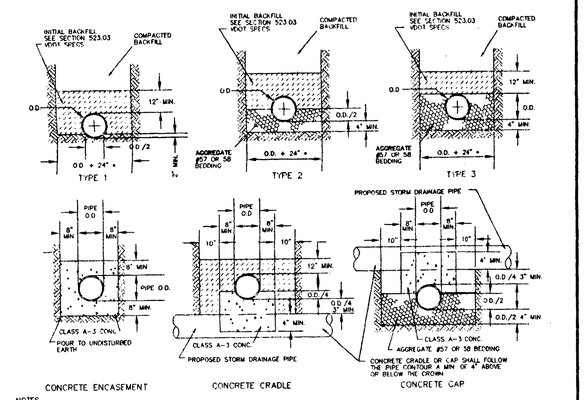

NOTES:
1 WHERE THE TRENCH BOTTOM IS IN ROCK, IT SHALL BE EXCAVATED TO A MINIMUM OF 8" BELOW THE BOTTOM OF THE PIPE AND BACKFIELD WITH BEDDING MATERIAL
2 WHERE PIPE FOUNDATIONS ARE YIELDING, PIPE SHALL BE BEDDED ON A MINIMUM OF 4" BEDDING MATERIAL
* FOR PIPE LESS THAN 12" THE TRENCH WIDTH MAY BE 36" MAXIMUM.

WATER METER BOX PRECAST CONCRETE (FOR CAST IRON METER BOX)

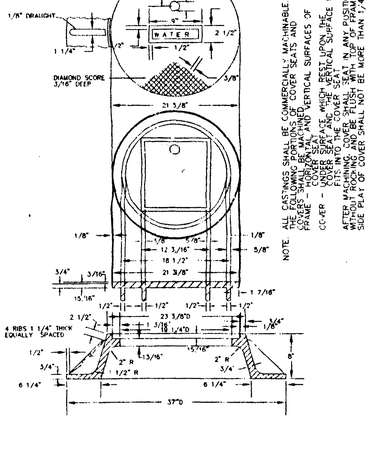

WATER VALVE NO. 2 BOX

NOTE: ALL CASTINGS SHALL BE COMMERCIALLY MACHINABLE. THE FOLLOWING PORTIONS OF COVER SEATS AND COVERS SHALL BE MACHINED: FRAME – HORIZONTAL AND VERTICAL SURFACES OF COVER SEAT. COVER – UNDER SURFACE WHICH RESTS UPON THE COVER SEAT AND THE VERTICAL SURFACE WHICH FITS INTO THE COVER SEAT. AFTER MACHINING, COVER SHALL SEAT IN ANY POSITION WITHOUT ROCKING AND BE FLUSH WITH TOP OF FRAME. SIDE PLAY OF COVER SHALL NOT BE MORE THAN 1/4".

WATER VALVE NO. 1 BOX

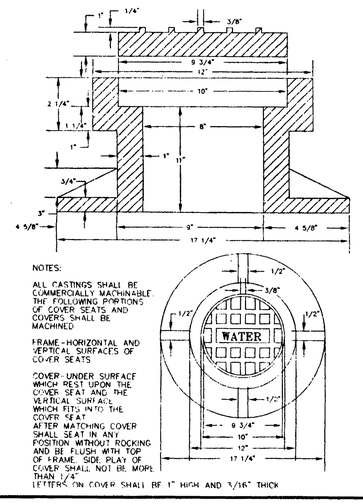

NOTES:
ALL CASTINGS SHALL BE COMMERCIALLY MACHINABLE. THE FOLLOWING PORTIONS OF COVER SEATS AND COVERS SHALL BE MACHINED
FRAME - HORIZONTAL AND VERTICAL SURFACES OF COVER SEATS
COVER - UNDER SURFACE WHICH REST UPON THE COVER SEAT AND THE VERTICAL SURFACE WHICH FITS INTO THE COVER SEAT
AFTER MATCHING COVER SHALL SEAT IN ANY POSITION WITHOUT ROCKING AND BE FLUSH WITH TOP OF FRAME. SIDE PLAY OF COVER SHALL NOT BE MORE THAN 1/4"
LETTERS ON COVER SHALL BE 1" HIGH AND 3/16" THICK

FIRE HYDRANT SETTING

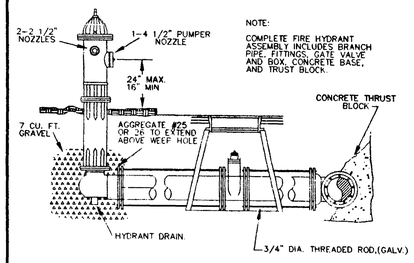

NOTE:
COMPLETE FIRE HYDRANT ASSEMBLY INCLUDES BRANCH PIPE, FITTINGS, GATE VALVE AND BOX, CONCRETE BASE, AND TRUST BLOCK.

STANDARD SETTING FOR 5/8" WATER METER

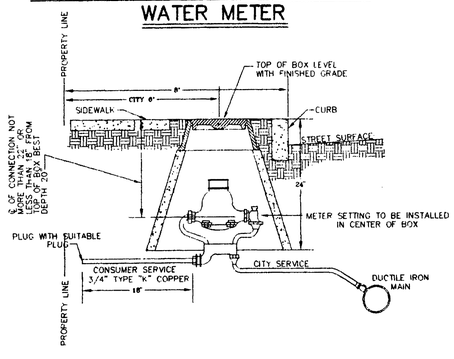

REACTION BLOCKING WATER AND SANITARY SEWER FACILITIES

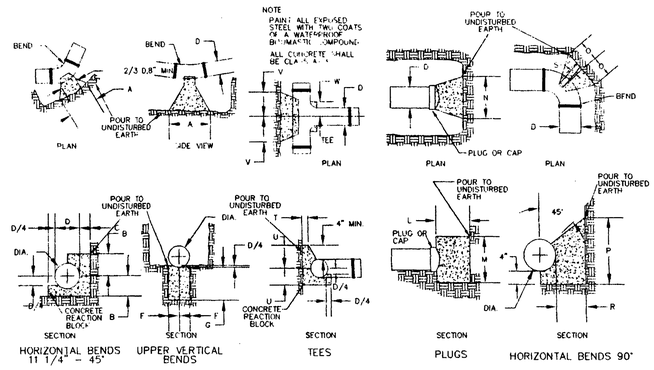

DIA	HORIZONTAL BENDS 11 1/4"			HORIZONTAL BENDS 22 1/2"			HORIZONTAL BENDS 45"			UPPER VERTICAL BENDS 11 1/4"			UPPER VERTICAL BENDS 22 1/2"			UPPER VERTICAL BENDS 45"			PLUGS			HORIZ. BENDS 90°			TEE BRANCH		
	A	B	C	A	B	C	A	B	C	E	F	G	E	F	G	E	F	G	L	M	N	O	P	R	S	T	U	V	W
4"	.50	.58	.75	.75	.58	.75	1.25	.58	.75	.50	.58	.58	.75	.58	.58	1.25	.58	.58	.50	1.17	1.50	1.17	1.17	1.67	.42	.75	.67	.75	.50
6"	.50	.58	.75	.75	.58	.75	1.25	.58	.75	.50	.58	.58	.75	.58	.58	1.25	.58	.58	.50	1.17	1.50	1.17	1.17	1.67	.42	.75	.67	.75	.50
8"	.67	.67	.75	1.00	.67	.75	2.00	.67	.75	.67	.67	.58	1.00	.67	.67	2.08	.75	.83	.67	1.50	2.25	1.58	1.50	1.75	.50	.75	.83	1.00	.67
10"	.83	.75	.75	1.50	.75	.83	2.50	.75	.92	.83	.75	.67	1.50	.83	.67	2.08	.75	.83	.67	2.00	2.50	1.67	2.08	1.75	.50	.83	1.00	1.25	.67
12"	1.00	.83	.75	1.75	.92	.92	2.92	.92	1.17	1.00	.83	.67	1.75	.83	.67	2.50	.92	.92	.83	2.33	3.25	2.00	2.50	1.92	.58	1.00	1.25	1.42	.67
16"	1.33	1.00	.75	2.33	1.00	1.17	3.67	1.25	1.42	1.33	1.00	.75	2.25	.83	.75	3.33	1.25	1.25	1.00	2.92	4.17	2.08	3.00	2.17	.83	1.17	1.67	1.83	.83
20"	1.67	1.17	1.00	3.17	1.17	1.33	4.75	1.50	1.83	1.67	1.17	.83	3.00	1.17	1.00	4.17	1.50	1.50	1.33	3.75	5.17	3.50	3.83	2.83	1.00	1.33	2.08	2.25	1.17
24"	2.00	1.33	1.00	4.00	1.33	1.50	6.08	1.67	1.92	2.00	1.33	1.00	3.50	1.33	1.00	5.00	1.75	1.75	1.67	4.33	6.25	4.67	4.00	3.00	1.00	1.50	2.50	2.67	1.33
30"	2.50	1.50	1.08	5.00	1.58	1.75	7.92	2.00	3.08	2.50	1.58	1.08	4.17	1.58	1.08	6.25	2.25	2.25	2.00	5.42	7.42	5.57	5.00	3.83	1.17	1.75	3.08	3.92	1.83
36"	3.00	1.92	1.17	5.75	2.00	2.00	8.92	2.50	3.33	3.00	1.58	1.17	5.33	2.08	1.17	7.50	2.58	2.67	2.00	6.50	9.00	6.83	6.00	4.83	1.17	2.00	3.75	3.92	1.83

City of Roanoke
Office of City Engineer
215 Church Avenue
Room 350
Roanoke, Virginia 24011
(703) 981-2731

WATER DETAILS

Drawn By	DWD
Designed By	
Checked By	PCS
Date	9/20/94
Scale	NTS
Plan Number	
Sheet	C6 OF 7