GENERAL NOTES:

1. TRAFFIC BEARING BOX REQUIRED IN TRAFFIC AREAS.
2. ALL PIPE AND FITTINGS SHALL BE OF SIMILAR MATERIAL.
3. ALL PIPE SHALL BE OF SIZE SHOWN.
4. NO BENDS ARE ALLOWED IN THE LATERAL FROM THE MAIN TO THE CLEAN-OUT STACK WYE. (EXCEPT AS NOTED.)
5. ALL MAIN LINE TAPS ON ACTIVE MAINS WILL BE PERFORMED BY WESTERN VIRGINA WATER AUTHORITY.
6. PIPING BEHIND CLEANOUT TO BE INSTALLED PER BOCA CODE.
7. MINIMUM COVER FOR ALL SEWER LATERALS SHALL BE THREE (3') FEET.
8. PROPERTY OWNER RESPONSIBLE FOR INSTALLING CLEANOUT ON PROPERTY LINE WHEN MAINTENANCE OCCURS, IN ACCORDANCE WITH THIS STANDARD.
9. FLOWLINE AT CLEANOUT WYE SHALL BE A MINIMUM OF THREE FEET (3') BELOW LOWEST SERVED FINISHED FLOOR.

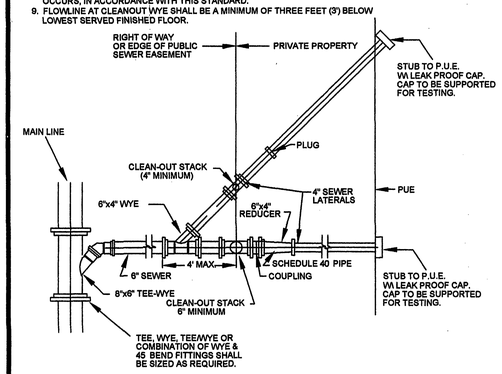

WESTERN VIRGINIA WATER AUTHORITY - CONSTRUCTION STANDARDS

REVISION	DATE		COMBINED 6" BY TWO 4" LATERALS	S-11
	07/01/04			
	03/01/06			

NOTES:

1. ALL MANHOLE FRAMES AND COVERS SHALL BE EAST JORDAN IRON WORKS, INC. WATERTIGHT MANHOLE FRAME MODEL #1045Z, WATERTIGHT COVER MODEL #1040AGS AND BOLT-DOWN MANHOLE COVER MODEL #1040ACLGS, OR APPROVED EQUAL. BOLT-DOWN MODEL TO BE USED IN AREAS SUBJECTED TO FLOODING OR AS DIRECTED BY THE AUTHORITY.
2. STEPS TO BE VERTICALLY ALIGNED.
3. THE FRAME AND COVER SHALL BE PROPERLY ALIGNED WITH THE 2 FOOT OPENING OF THE MANHOLE STRUCTURE AND BOLTED IN PLACE.
4. FLAT TOP MANHOLES MAY ONLY BE SUBSTITUTED WITH THE PERMISSION OF THE UTILITY DIRECTOR. WHEN USED, THE ECCENTRIC OPENING MUST LINE UP WITH THE STEPS.
5. SAMPLING MANHOLES IN TRAFFIC AREAS SHALL BE CONSTRUCTED AS PER MANHOLE DETAILS.
6. FLEXIBLE JOINT MANHOLE CONNECTION SHALL BE AS MANUFACTURED BY PRES-SEAL GASKET CORPORATION OR EQUAL.
7. GROUT ANNULAR SPACE BETWEEN PIPE AND PRECAST MANHOLE ON INSIDE OF MANHOLE.

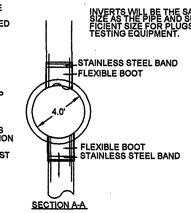

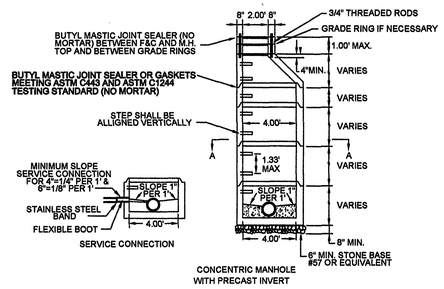

WESTERN VIRGINIA WATER AUTHORITY - CONSTRUCTION STANDARDS

REVISION	DATE		4' STANDARD MANHOLE FOR PIPE 15" OR SMALLER	S-01
	07/01/04			
	03/01/06			

NOTES:

1. ALL MANHOLE FRAMES AND COVERS SHALL BE EAST JORDAN IRON WORKS, INC. WATERTIGHT MANHOLE FRAME MODEL #1045Z, WATERTIGHT COVER MODEL #1040AGS AND BOLT-DOWN MANHOLE COVER MODEL #1040ACLGS, OR APPROVED EQUAL. BOLT-DOWN MODEL TO BE USED IN AREAS SUBJECTED TO FLOODING OR AS DIRECTED BY THE AUTHORITY.
2. STEPS TO BE VERTICALLY ALIGNED.
3. THE FRAME AND COVER SHALL BE PROPERLY ALIGNED WITH THE 2 FOOT OPENING OF THE MANHOLE STRUCTURE AND BOLTED IN PLACE.
4. RELINER BY DURAN INSIDE DROP WILL BE ALLOWED.
5. GROUT ANNULAR SPACE BETWEEN PIPE AND PRECAST MANHOLE ON INSIDE OF MANHOLE.
6. STEPS SHALL BE A MINIMUM OF 90 DEGREES FROM DROP.

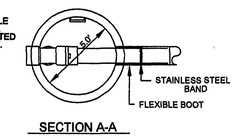

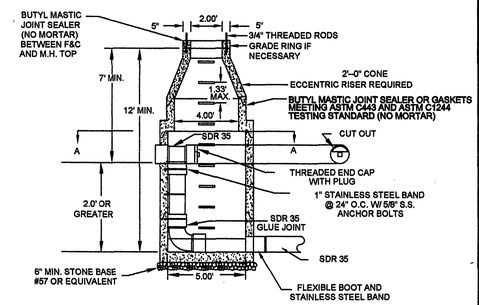

NOTE : 6' DIAMETER MANHOLE REQUIRED FOR TWO INSIDE DROP CONNECTIONS (MAIN LINE OR LATERAL)

WESTERN VIRGINIA WATER AUTHORITY - CONSTRUCTION STANDARDS

REVISION	DATE		MAINLINE OR LATERAL INSIDE DROP MANHOLE (FOR USE WITH PVC PIPE)	S-04
	07/01/04			
	03/01/06			

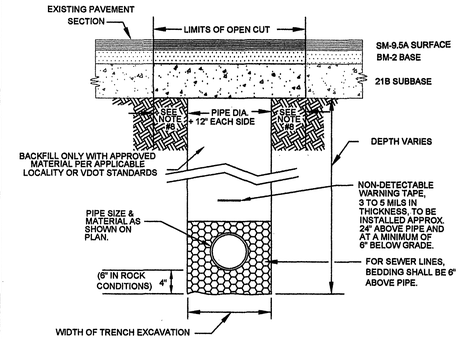

NOTES:

1. BEDDING, HAUNCHING AND INITIAL BACKFILL CONSTRUCTION SHALL BE IN ACCORDANCE WITH MANUFACTURER'S RECOMMENDATION.
2. ALL PVC PIPE SHALL BE BEDDED IN COMPACTED VDOT #57 OR #68 STONE.
3. IN ROANOKE COUNTY, THE CONTRACTOR SHALL REPLACE THE OPEN CUT WITH A MINIMUM TOP COURSE OF 1.5' (MINIMUM) VDOT SM-9.5A, BASE COURSE OF 6" VDOT BM-25d, AND SUBBASE OF 10" VDOT 21B, OR AS REQUIRED BY VDOT. IN ROANOKE CITY, CONTRACTOR SHALL REPLACE PAVEMENT AS REQUIRED BY CITY OF ROANOKE RIGHT OF WAY EXCAVATION AND RESTORATION STANDARDS.
4. ALL CONSTRUCTION WITHIN THE PUBLIC RIGHT-OF-WAY SHALL BE AS SPECIFIED BY VDOT OR APPLICABLE LOCALITY.
5. PRIOR TO CONSTRUCTION, CONTRACTOR IS RESPONSIBLE FOR SECURING ALL REQUIRED PERMITS FROM VDOT AND/OR APPLICABLE LOCALITY.
6. IN AREAS SUBJECTED TO VEHICULAR TRAFFIC, BEDDING STONE AND FILL SHALL BE PLACED IN 6" LIFTS AND SHALL BE COMPACTED TO AT LEAST 95% OF MAXIMUM DENSITY AS DETERMINED BY ASTM D 698.
7. ALL SEWER LINE PIPE SHALL BE BEDDED IN COMPACTED GRANULAR MATERIAL. BEDDING REQUIREMENTS FOR DUCTILE SEWER LINE ARE DEPENDENT ON MANUFACTURER'S BEDDING CRITERIA.
8. BENCHCUT ON EACH SIDE OF PAVEMENT: CITY OF ROANOKE EQUALS 12", VDOT RIGHT-OF-WAY EQUALS 6".
9. ALL EXCAVATIONS SHALL COMPLY WITH OSHA TECHNICAL MANUAL, CHAPTER 2, TITLED "EXCAVATIONS: HAZARD RECOGNITION IN TRENCHING AND SHORING."

WESTERN VIRGINIA WATER AUTHORITY - CONSTRUCTION STANDARDS

REVISION	DATE		BEDDING AND BACKFILL UNDER PAVEMENT AND RIGHT-OF-WAY	S-31
	07/01/04			
	03/01/06			

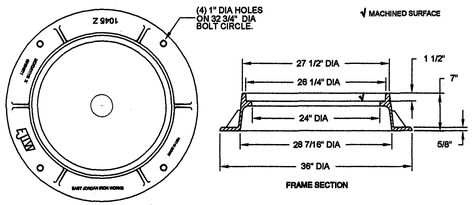

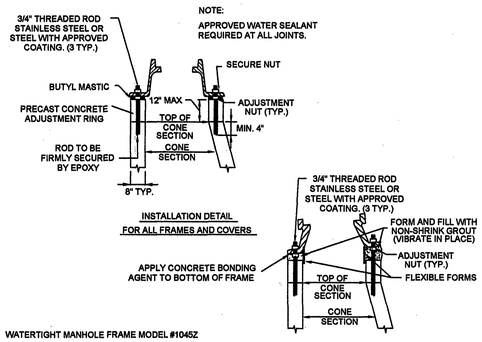

WATERTIGHT MANHOLE FRAME MODEL #1045Z
BY EAST JORDAN IRON WORKS, INC. OR EQUIVALENT.

WESTERN VIRGINIA WATER AUTHORITY - CONSTRUCTION STANDARDS

REVISION	DATE		WATERTIGHT MANHOLE FRAME	S-05
	07/01/04			

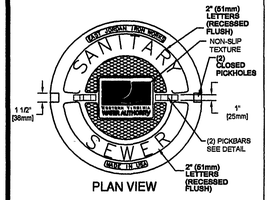

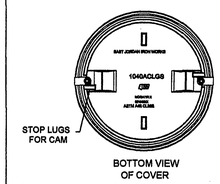

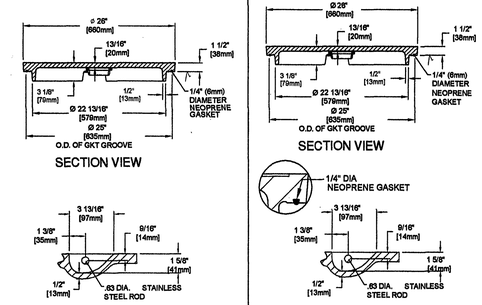

STANDARD MANHOLE COVER MODEL #1040AGS
BY EAST JORDAN IRON WORKS, INC OR EQUIVALENT.

STANDARD MANHOLE COVER

PICKBAR DETAIL

1. BOLT-DOWN MANHOLE COVER MODEL #1040ACLGS BY EAST JORDAN IRON WORKS, INC OR EQUIVALENT.
2. BOLT-DOWN MANHOLE COVERS TO BE USED IN AREAS SUBJECT TO FLOODING, SUCH AS ALONG STREAM OR CREEK BANKS, OR AS DIRECTED BY THE AUTHORITY.

BOLT-DOWN MANHOLE COVER

WESTERN VIRGINIA WATER AUTHORITY - CONSTRUCTION STANDARDS

REVISION	DATE		WATERTIGHT MANHOLE COVER	S-06
	07/01/04			
	03/01/06			

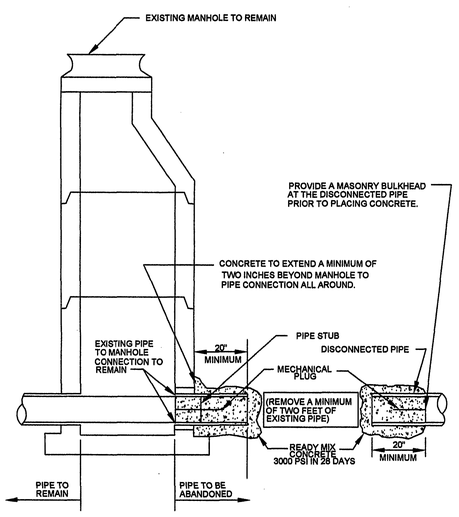

WESTERN VIRGINIA WATER AUTHORITY - CONSTRUCTION STANDARDS

REVISION	DATE		SANITARY SEWER PIPE ABANDONMENT AT A MANHOLE	S-23
	07/01/04			

NOTES:

1. BEDDING, HAUNCHING AND INITIAL BACKFILL CONSTRUCTION SHALL BE IN ACCORDANCE WITH MANUFACTURER'S RECOMMENDATION.
2. ALL PVC PIPE SHALL BE BEDDED IN COMPACTED VDOT #57 OR #68 STONE.
3. IN AREAS NOT SUBJECTED TO VEHICULAR TRAFFIC, BEDDING STONE AND FILL SHALL BE PLACED IN 6" LIFTS FROM BOTTOM OF TRENCH TO 1' ABOVE THE PIPE AND THE REMAINING SHALL BE PLACED IN 10" LIFTS AND SHALL BE COMPACTED TO AT LEAST 90% OF MAXIMUM DENSITY AS DETERMINED BY ASTM D 698.
4. ALL SEWER LINE PIPE SHALL BE BEDDED IN COMPACTED GRANULAR MATERIAL. BEDDING REQUIREMENTS FOR DUCTILE SEWER LINE ARE DEPENDENT ON MANUFACTURER'S BEDDING CRITERIA.
5. ALL EXCAVATIONS SHALL COMPLY WITH OSHA TECHNICAL MANUAL, CHAPTER 2, TITLED "EXCAVATIONS: HAZARD RECOGNITION IN TRENCHING AND SHORING."

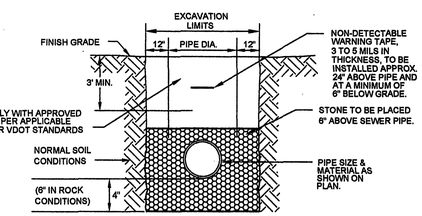

WESTERN VIRGINIA WATER AUTHORITY - CONSTRUCTION STANDARDS

REVISION	DATE		BEDDING AND BACKFILL OUTSIDE OF PAVED AREAS	S-30
	07/01/04			
	03/01/06			

WVWA ID# 6T7HZ8

WESTERN VIRGINIA WATER AUTHORITY
ENGINEERING SERVICES
601 S JEFFERSON ST, SUITE 300
ROANOKE, VA 24011
540-853-5641

COMMONWEALTH OF VIRGINIA — Cassandra Allice — No. 035867 — PROFESSIONAL ENGINEER

Trinkle Avenue Sewer Replacement

DETAILS PLAN

Rev	Description	Date	By
	AS-BUILT	12/06/2006	K.W.

Designed: CDA
Drawn: CDA
Checked: CDA
Approved: JGR
Date: 29 JUN 2006
Project: ???

C4
Sheet 4 of 4