va811.com
Dig With CARE

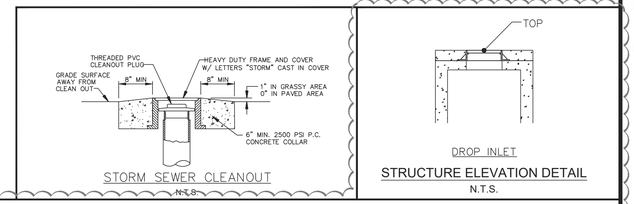

STORM SEWER CLEANOUT
N.T.S.

DROP INLET
STRUCTURE ELEVATION DETAIL
N.T.S.

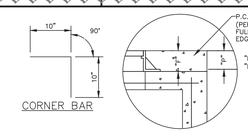

CORNER BAR

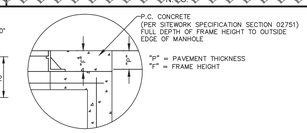

INSET "A"

NOTE: TOP OF MANHOLE TO BE LEVEL WITH FINISH GRADE UNLESS OTHERWISE NOTED OR DIRECTED BY THE ENGINEER. USE ADJUSTMENT RINGS AS REQUIRED BUT NOT TO EXCEED 12".

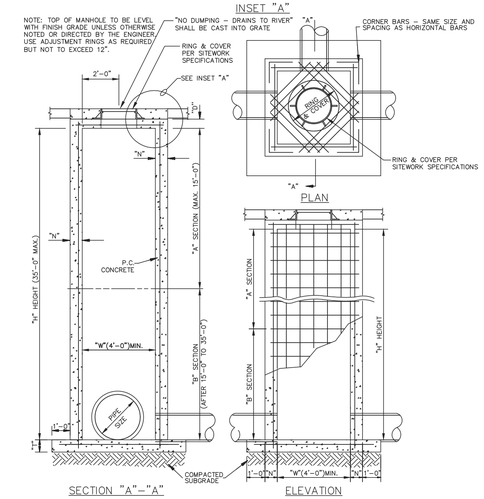

GENERAL NOTES:
1. ALL EXPOSED CORNERS TO HAVE 3/4" CHAMFER
2. ALL REINFORCING BARS TO HAVE 2" COVER.
3. SEE GRADING AND DRAINAGE PLAN FOR PIPE SIZES, LOCATIONS, AND FLOW LINES.
4. PIPES SHALL CONNECT TO THE ENDS OR SIDES OF THE INLET. CONNECTION SHALL NOT BE MADE AT CORNERS OF BOX.
5. ALL REINFORCING BARS TO BE GRADE 60.
6. PRECAST MANHOLE MAY BE USED UNLESS OTHERWISE NOTED OR DIRECTED BY THE ENGINEER.

PRECAST MANHOLE SPECIFICATIONS

ASTM C478
CONCRETE: 4000 PSI AE (MIN.)
JOINT: WATERTIGHT RUBBER GASKET

REINFORCEMENT SCHEDULE, BASE	
SECTION	
"A"	#4's @ 6" E.W.
"B"	#6's @ 6" E.W.

TABLE OF "W" DIMENSIONS			
PIPE SIZE	SKEW OF CROSS DRAIN		
SINGLE	STRAIGHT	30°	45°
24"	4'-0"	4'-0"	4'-10"
30"	4'-0"	4'-7"	5'-8"
36"	4'-0"	5'-3"	6'-5"
42"	5'-3"	5'-11"	7'-3"
48"	5'-10"	6'-7"	8'-0"
60"	7'-0"	7'-10"	9'-8"
DOUBLE	FOR "A" SECTION ONLY		
24"	7'-0"	7'-10"	9'-5"
30"	8'-2"	9'-2"	11'-0"
36"	9'-4"	10'-6"	12'-6"
42"	10'-6"	11'-10"	14'-2"
48"	11'-8"	13'-2"	15'-10"

REINFORCEMENT SCHEDULE, WALLS			
SECTION	WIDTH ("W")	HOR.	VERT.
"A"	4'	#4's @ 9"	#4's @ 10"
	BETWEEN 4' & 7'	#6's @ 9"	#4's @ 10"
	GREATER THAN 7'	#5's @ 4 1/2"	#4's @ 10"
"B"	4'	#4's @ 6"	#4's @ 10"
	BETWEEN 4' & 7'	#6's @ 6"	#4's @ 10"

TABLE OF "T" & "N" DIMENSIONS				
SECTION	WIDTH ("W")	"T"	"N"	"D"
"A"	BETWEEN 4' & 7'	6" + PIPE THICKNESS	8"	6"
	GREATER THAN 7'	6" + PIPE THICKNESS	8"	8"
"B"	4'	6" + PIPE THICKNESS	8"	8"
	BETWEEN 4' & 7'	6" + PIPE THICKNESS	10"	8"

REINFORCEMENT SCHEDULE, TOP		
DIMENSIONS	STEEL	SPECIAL PATTERN
W1 = 7' OR LESS	#4's @ 8" E.W.	DIAGONAL @ COVER
W2 = 7' OR LESS	#4's @ 8" E.W.	DIAGONAL @ COVER
W1 = 7' OR LESS	#4's @ 8" E.W.	DIAGONAL @ COVER
W2 = 7' OR GREATER	#4's @ 6" E.W.	DIAGONAL @ COVER
W1 = 7' OR GREATER	#4's @ 6" E.W.	DIAGONAL @ COVER
W2 = 7' OR GREATER	#4's @ 6" E.W.	DIAGONAL @ COVER

DROP INLET
N.T.S.

SITE, INCORPORATED
CIVIL ENGINEERS & SURVEYORS
EST. 1997
10215 Technology Drive, Suite 304
Knoxville, TN 37932
(865) 777-4160
www.site-incorporated.com

COMMONWEALTH OF VIRGINIA
JOHN R. ANDERSON
Lic. No. 044120
01/16/2023
PROFESSIONAL ENGINEER

Site Details

Proposed Car Wash

3250 Electric Road
Cave Spring, Virginia 21048
Wild Partners

REVISIONS

NO.	DATE	COMMENTS

ORIGINAL ISSUE: 01/16/2023
SITE PROJECT #: 2062
FILE: Details
SHEET: 12 OF: 19

C8.0

APPROVED, 3/28/2023