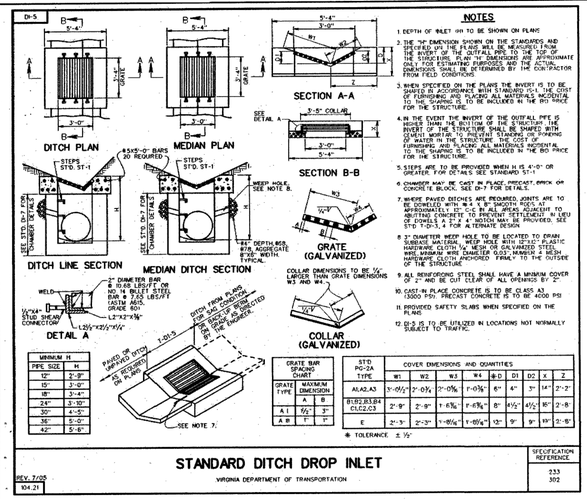

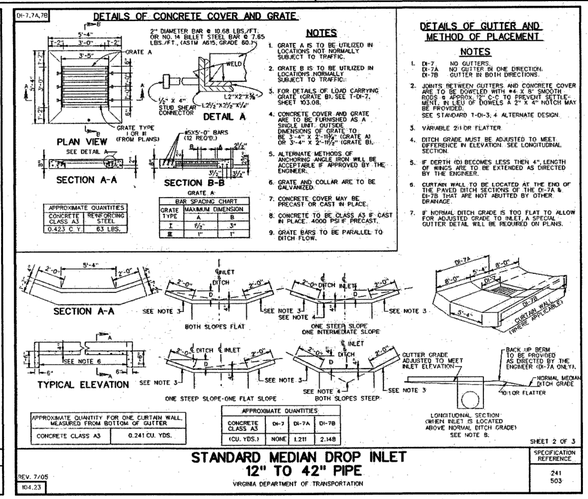

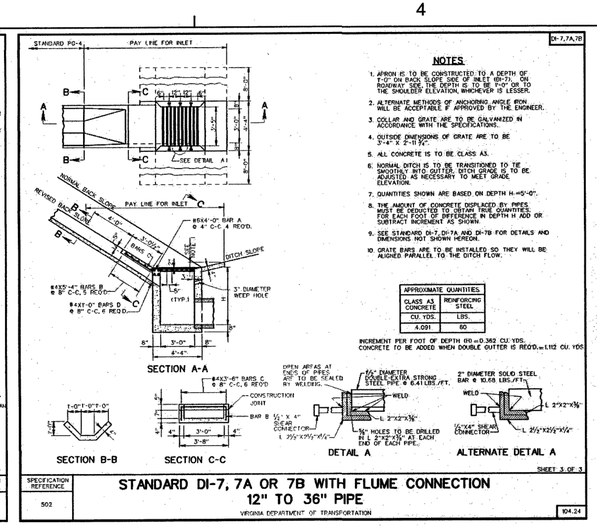

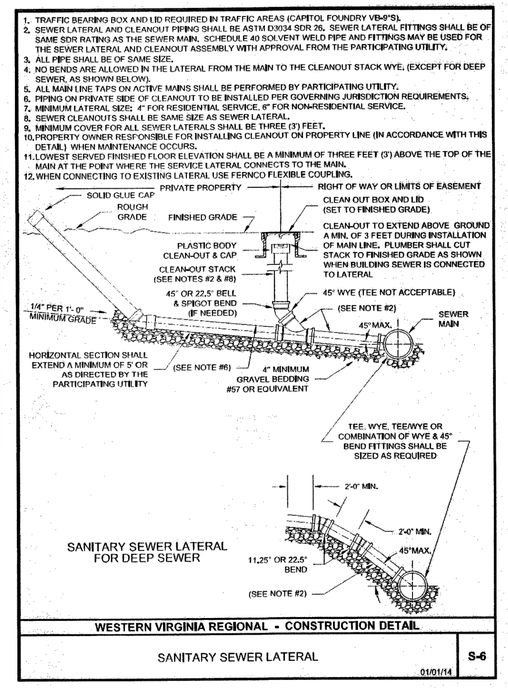

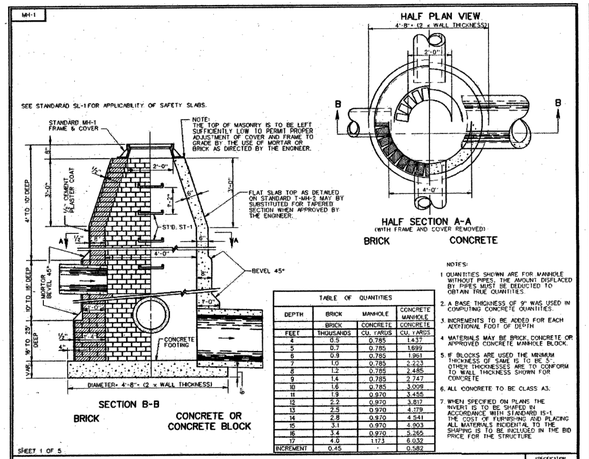

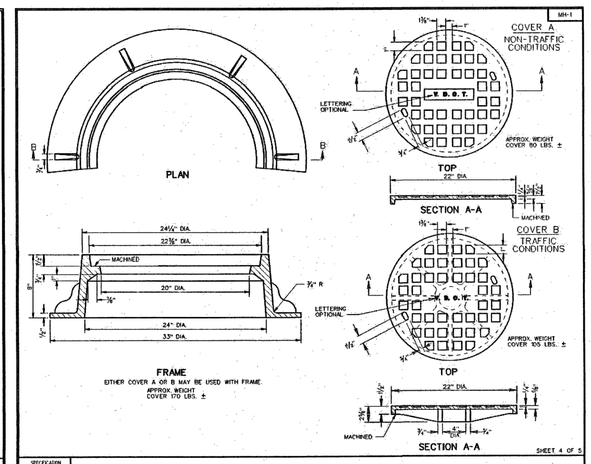

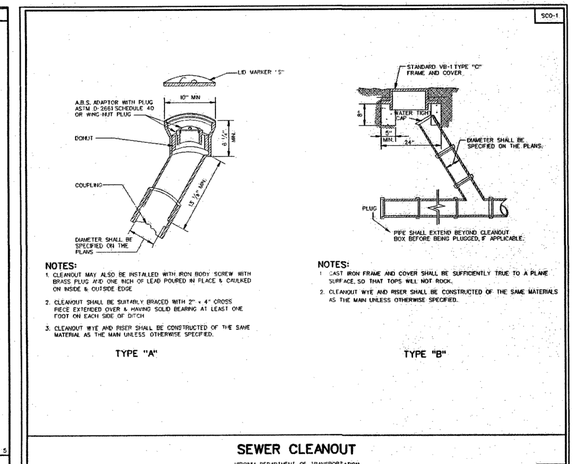

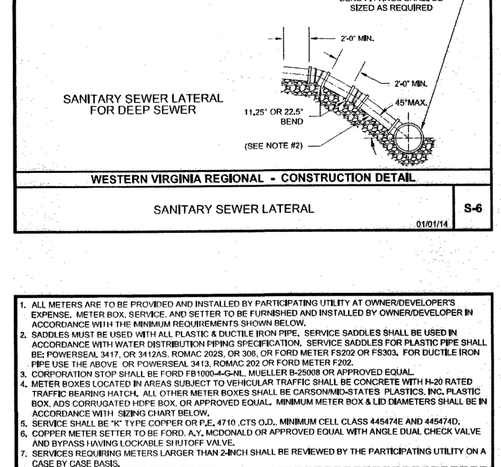

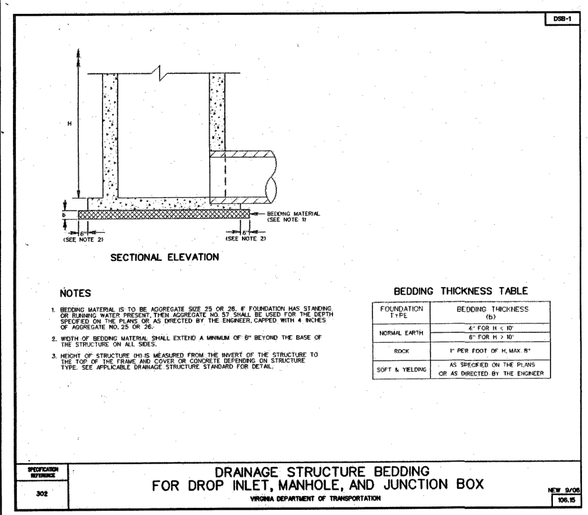

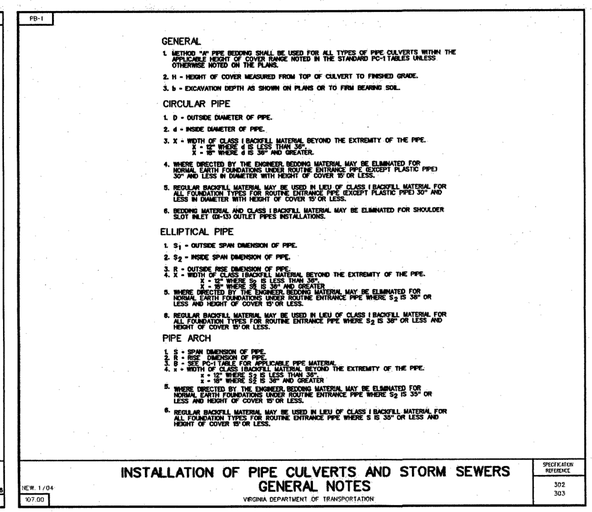

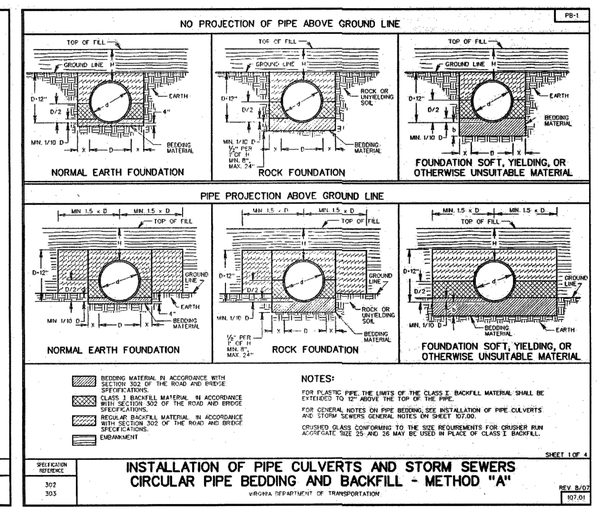

SOLEX ARCHITECTURE
SOLEX ARCHITECTURE, INC.
308 CRAGHEAD STREET
SUITE 200
DANVILLE, VIRGINIA 24541
434.888.0767 PHONE
434.888.0767 FAX

Reynolds-Clark DEVELOPMENT, INC.

COMMONWEALTH OF VIRGINIA
TIMOTHY C. REYNOLDS
Lic. No. 032571
09/14/2016
PROFESSIONAL ENGINEER

VALLEYSTAR CREDIT UNION
ROANOKE BRANCH
BUCK MOUNTAIN ROAD
ROANOKE COUNTY, VIRGINIA
DESIGN DEVELOPMENT

SHEET INFORMATION

REVISIONS

NO.	DESCRIPTION	DATE
1	FROM SUBMITTAL #1	2015.09.28
2	FROM SUBMITTAL #2	2015.11.20
3	FROM SUBMITTAL #3	2015.12.16
4	FROM SUBMITTAL #4	2016.02.22
5	FROM SUBMITTAL #5	2016.09.14

PROJECT NO.	20140012
DRAWN BY	TCR
CHECKED BY	
DATE	2016.05.27
SCALE	NOT TO SCALE

SHEET NAME
CONSTRUCTION DETAILS

APPROVED

SHEET NUMBER
D-105