DATE	NO.	SIZE	MAKE	OPEN	TURNS
7/99	1	6"	MUELLER	R	21

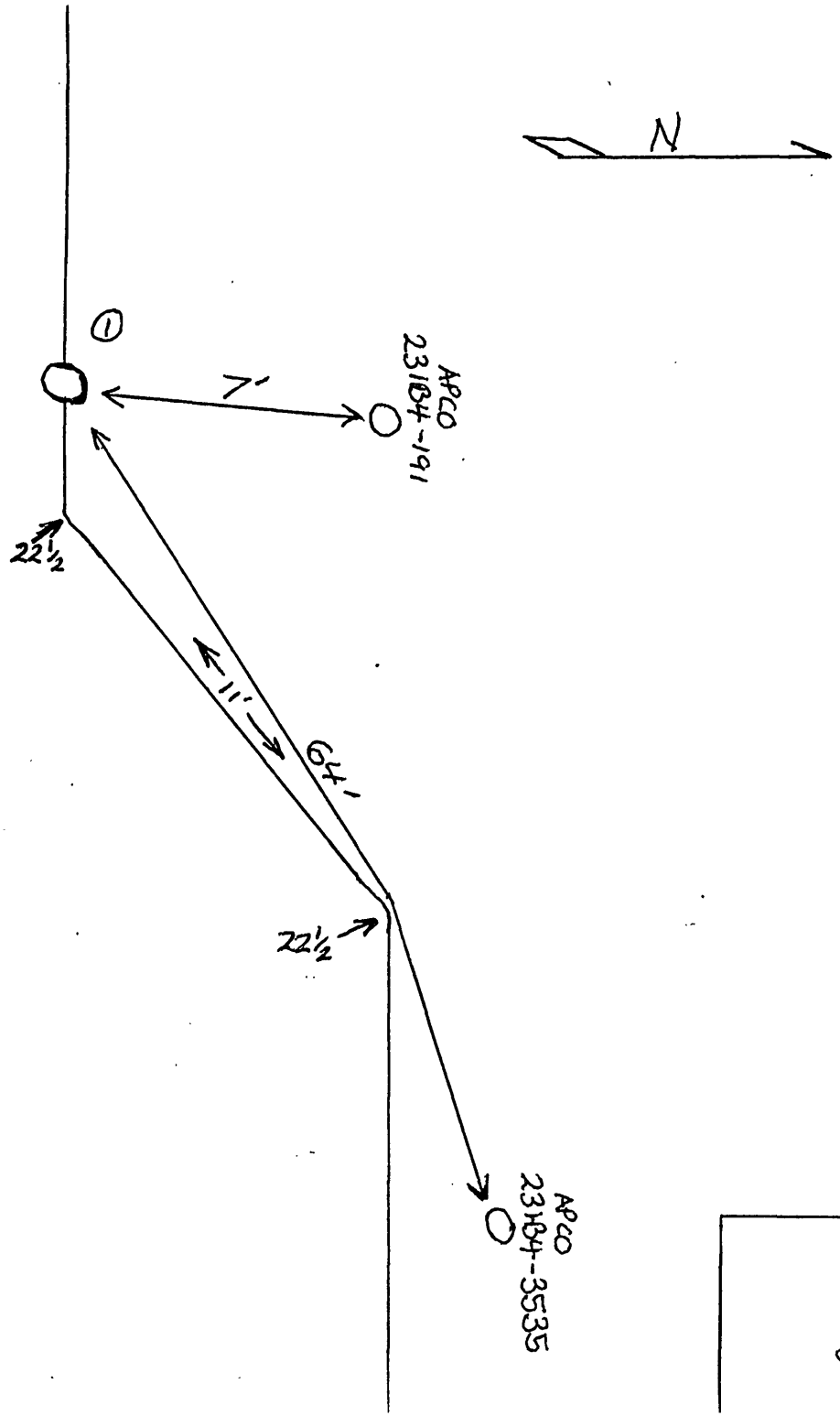

2900 Block of ORANGE AVE NE. (460 EAST)

CITY OF ROANOKE—WATER DEP'T

VALVE DIAGRAM

2900 BLOCK OF ORANGE AVE. NE

SEC. MAP 714

DATE 7-10-99 PAGE NO.

2968