12" CAST IRON GRATE

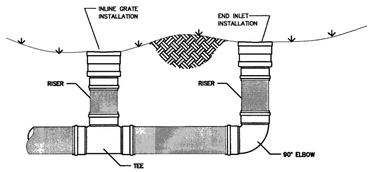

NYLOPLAST INLET

RECOMMENDED MANUFACTURER, APPROVED EQUAL MAY BE SUBSTITUTED WITH WRITTEN PERMISSION FROM THE ENGINEER.

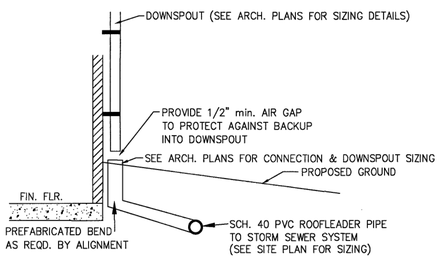

DOWNSPOUT CONNECTION DETAIL

N.T.S.

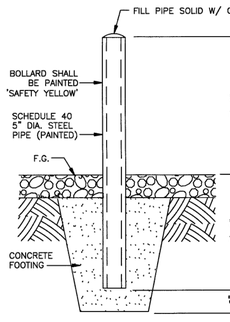

PIPE BOLLARD DETAIL

NO SCALE

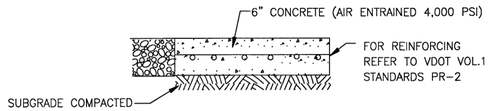

NOTE:
G.C. SHALL BE RESPONSIBLE FOR OBTAINING ADEQUATE SUB-GRADE COMPACTION.

SECTION THROUGH DUMPSTER PAD

NO SCALE

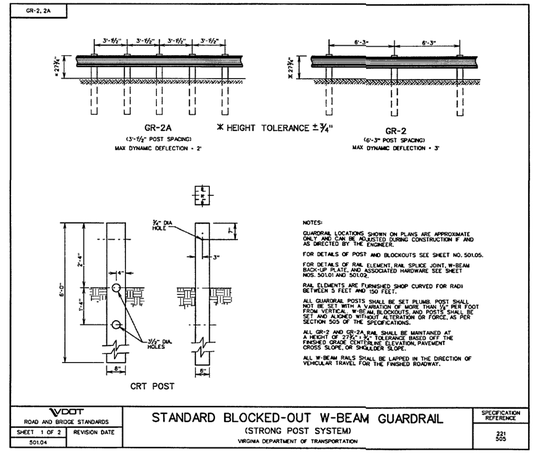

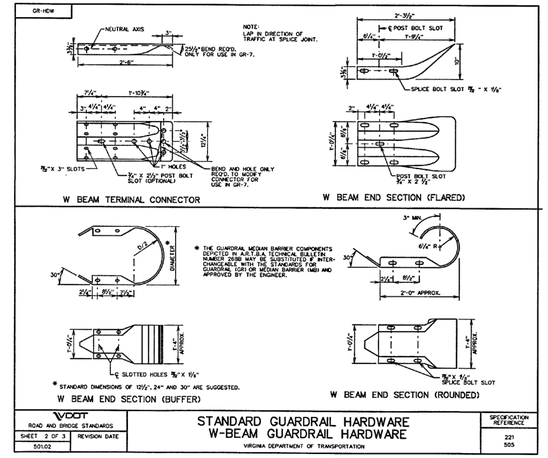

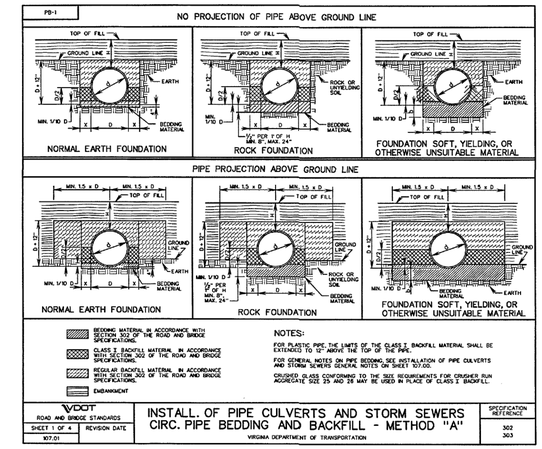

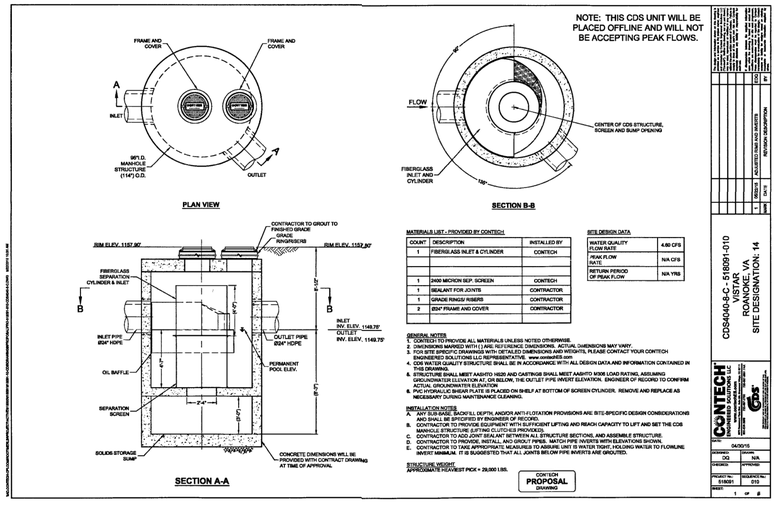

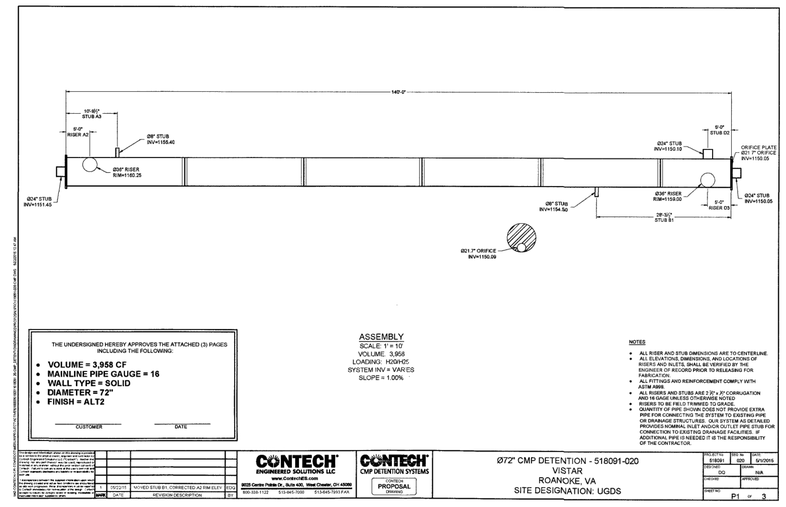

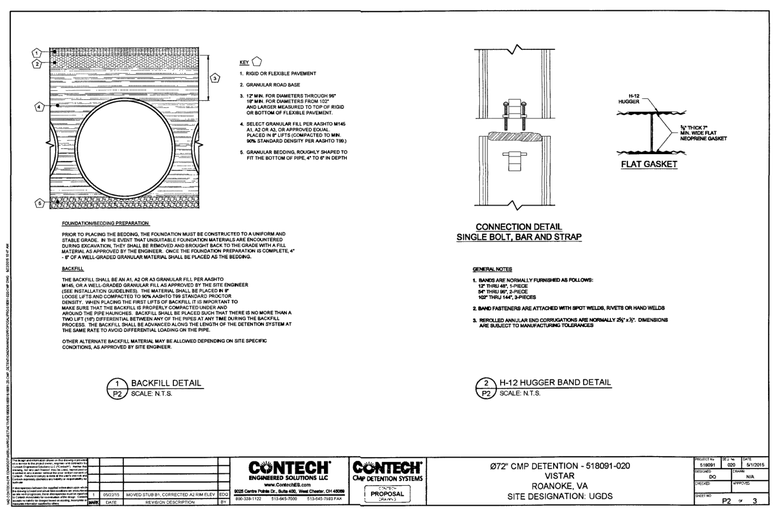

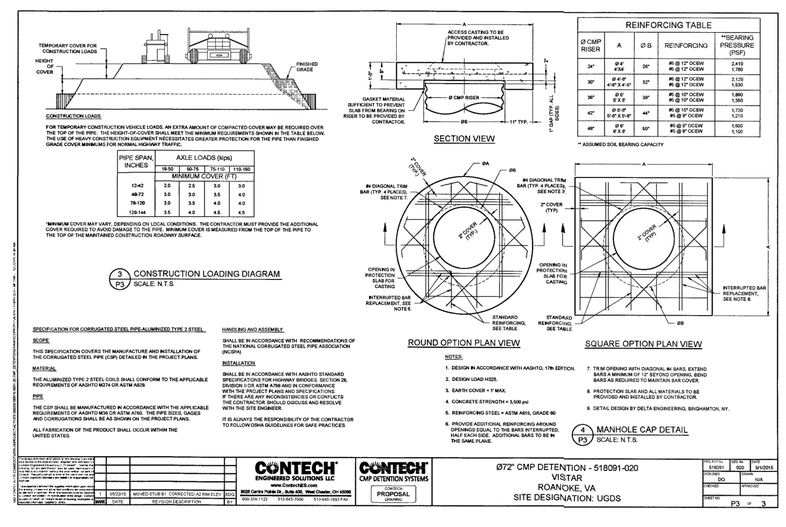

BALZER AND ASSOCIATES INC
REFLECTING TOMORROW
www.balzer.cc
Roanoke
New River Valley
Richmond
Staunton
Harrisonburg
RESIDENTIAL LAND DEVELOPMENT ENGINEERING
SITE DEVELOPMENT ENGINEERING
LAND USE PLANNING & ZONING
LANDSCAPE ARCHITECTURE
LAND SURVEYING
ARCHITECTURE
STRUCTURAL ENGINEERING
TRANSPORTATION ENGINEERING
ENVIRONMENTAL & SOIL SCIENCE
WETLAND DELINEATIONS & STREAM EVALUATIONS
Balzer and Associates, Inc.
1208 Corporate Circle
Roanoke, VA 24018
540-772-9580
FAX 540-772-8050
COMMONWEALTH OF VIRGINIA
CHRISTOPHER P. BURNS
Lic. No.047338
10/29/15
PROFESSIONAL ENGINEER

VISTAR
2154 MCVITTY RD. SW
SITE DETAILS 2
CITY OF ROANOKE, VIRGINIA

DRAWN BY CPB
DESIGNED BY CPB
CHECKED BY BTC
DATE 5/4/2015
SCALE AS NOTED

REVISIONS:
6/30/2015
8/6/2015
10/1/2015
10/29/2015

APPROVED
DEC 01 2015

SHEET NO.
C13

JOB NO. R1400187.00