NOTES:
1. ALL MANHOLE FRAMES AND COVERS SHALL BE DEWEY BROTHERS, INC. MH-RCR-3000W IN NON-PAVED AREAS REQUIRING WATERTIGHT FRAME & COVERS AND MH-RCR-3000EC-WT IN PAVED AREAS, OR APPROVED EQUAL.
2. STEPS TO BE VERTICALLY ALIGNED.
3. THE FRAME AND COVER SHALL BE PROPERLY ALIGNED WITH THE 2 FOOT OPENING OF THE MANHOLE STRUCTURE AND BOLTED IN PLACE.
4. ALL SAMPLING MANHOLES SHALL BE CONSTRUCTED AS PER MANHOLE DETAILS. WHEN NECESSARY, THE FLAT TOP MANHOLE MAY BE SUBSTITUTED. WITH ECCENTRIC OPENING AT STEPS.

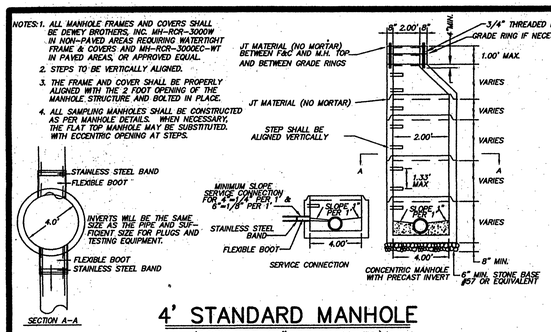

4' STANDARD MANHOLE
(FOR PIPE 15" OR SMALLER)

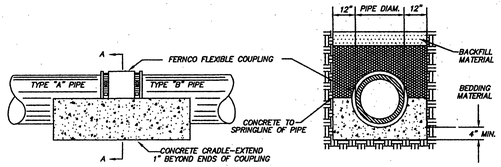

JOINING DISSIMILAR PIPE

Pipe Diameter (in.)	Min. Time (min: sec)	Length for Min. Time (ft)	Time for Longer Length (sec)	Specified Time for Length (L) Shown (min:sec)								
				100 ft	150 ft	200 ft	250 ft	300 ft	350 ft	400 ft	450 ft
4	3:46	597	.380 L	3:46	3:46	3:46	3:46	3:46	3:46	3:46	3:46
6	5:40	398	.854 L	5:40	5:40	5:40	5:40	5:40	5:40	5:42	6:24
8	7:34	298	1.520 L	7:34	7:34	7:34	7:34	7:36	8:52	10:08	11:24
10	9:26	239	2.374 L	9:26	9:26	9:28	9:53	11:52	13:51	15:49	17:48
12	11:20	199	3.418 L	11:20	11:20	11:24	14:15	17:05	19:56	22:47	25:38
15	14:10	159	5.342 L	14:10	14:10	17:48	22:15	26:42	31:09	35:36	40:04
18	17:00	133	7.692 L	17:00	19:13	25:38	32:03	38:27	44:52	51:16	57:41
21	19:50	114	10.470 L	19:50	26:10	34:54	43:37	52:21	61:00	69:48	78:31
24	22:40	99	13.674 L	22:47	34:11	45:34	56:58	68:22	79:46	91:10	102:33
27	25:30	88	17.308 L	28:51	43:16	57:41	72:07	86:32	100:57	115:22	129:48
30	28:20	80	21.366 L	35:37	53:25	71:13	89:02	106:50	124:38	142:26	160:15
33	31:10	72	25.852 L	43:05	64:38	86:10	107:43	129:16	150:43	172:21	193:53
36	34:00	66	30.768 L	51:17	76:55	102:34	128:12	153:50	179:29	205:07	230:46

MINIMUM SPECIFIED TIME REQUIRED FOR A 1.0 PSIG PRESSURE DROP FOR SIZE AND LENGTH OF PIPE INDICATED FOR Q = 0.0015

MAINLINE PRESSURE TEST REQUIREMENTS

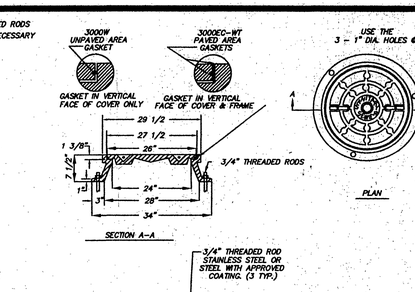

CONCRETE ENCASED PIPE

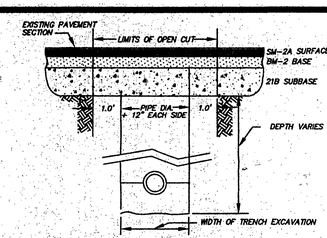

A. THE CONTRACTOR SHALL REPLACE THE OPEN CUT WITH A MINIMUM TOP COURSE, 2" VDOT SM-2A, BASE COURSE, 3" VDOT BM-2, AND SUBBASE, 8" VDOT 21B.
B. ALL CONSTRUCTION WITHIN THE PUBLIC RIGHT-OF-WAY SHALL BE AS SPECIFIED OR AS REQUIRED BY VDOT.
C. ALL EXPOSED EDGES OF EXISTING BITUMINOUS SURFACE COURSE SHALL BE PRIMED WITH A MATERIAL SATISFACTORY TO THE DIRECTOR BEFORE THE BITUMINOUS MIXTURES ARE REPLACED. EDGES OF TRENCH SHALL BE CUT TO A STRAIGHT LINE PRIOR TO PAVING.
D. THE BACKFILL IN THE TRENCH SHALL BE SUITABLE AND THOROUGHLY COMPACTED IN 8-INCH LAYERS BY TAMPING OR BY OTHER APPROVED METHOD BEFORE THE OPENING IS PAVED. NO EXCAVATIONS UNDER THE EXISTING PAVEMENT WILL BE PERMITTED. SHEETING OR SHORING SHALL BE USED, WHEN REQUIRED BY THE DEPTH OF THE TRENCH OR TYPE OF MATERIAL IN ACCORDANCE WITH VIRGINIA O.S.H.A. STANDARDS.

PAVEMENT REPLACEMENT OPEN CUT ROADWAY

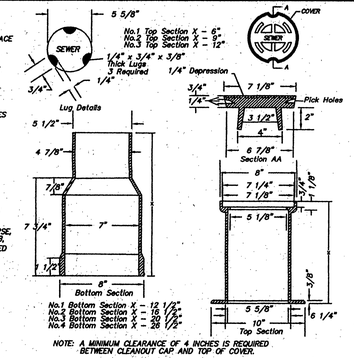

NOTE: A MINIMUM CLEARANCE OF 4 INCHES IS REQUIRED BETWEEN CLEANOUT CAP AND TOP OF COVER.

TRAFFIC BEARING CLEANOUT BOX

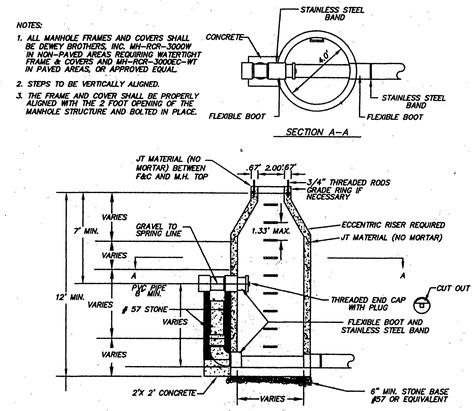

NOTE:
REFERENCE DETAIL DRAWINGS IN SPECS FOR DROP CONNECTION USING DUCTILE IRON PIPE.

OUTSIDE DROP MANHOLE
(FOR USE WITH PVC PIPE)

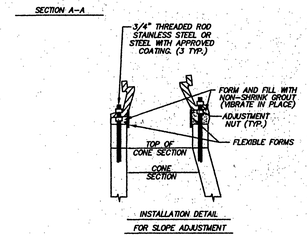

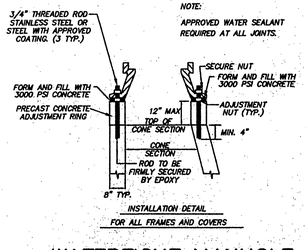

WATERTIGHT MANHOLE FRAME AND COVER

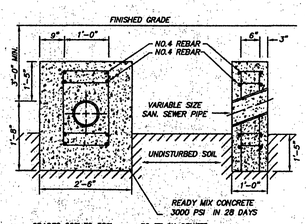

ANCHOR BLOCK

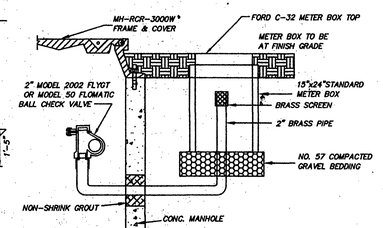

TYPE 2 MANHOLE VENT

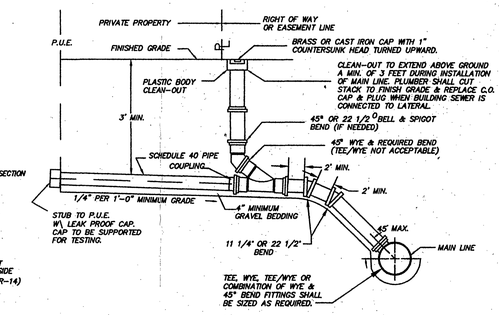

SANITARY SEWER LATERAL
(FOR DEEP SEWER)

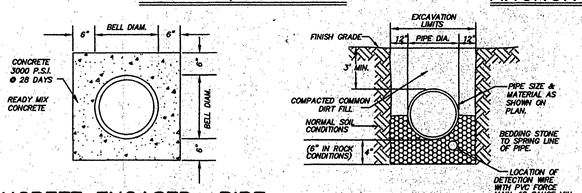

STONE BEDDING

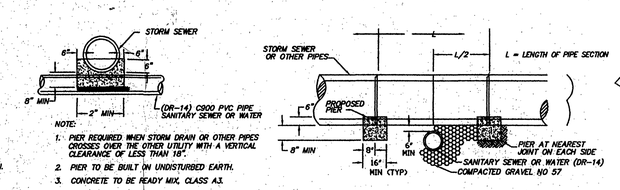

CONCRETE PIER

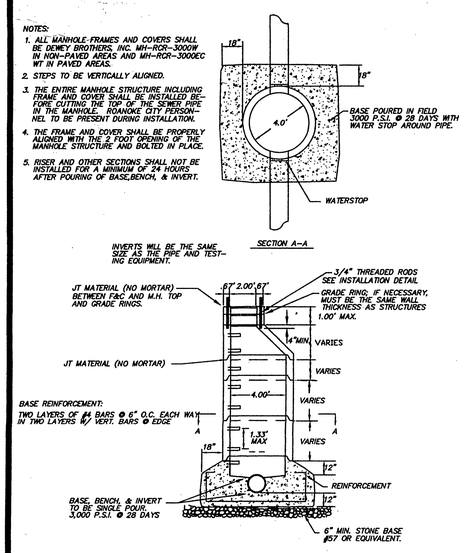

STRADDLE MANHOLE FOR PIPE 15" OR SMALLER

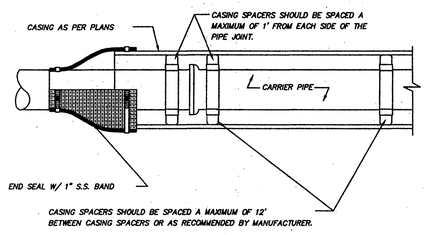

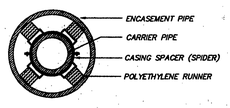

PIPE SUPPORT IN CASING PIPE

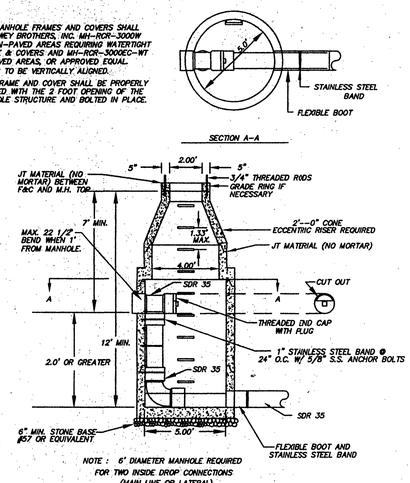

MAINLINE OR LATERAL DROP MANHOLE
(FOR USE WITH PVC PIPE)

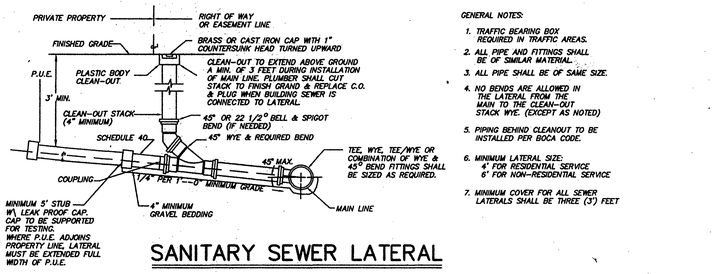

SANITARY SEWER LATERAL

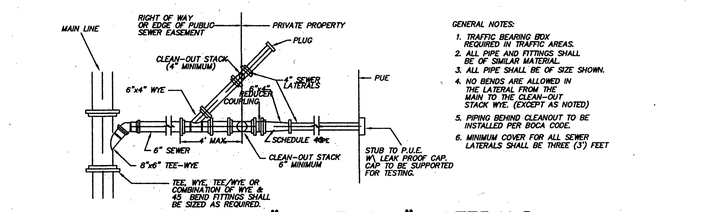

COMBINED 6" BY TWO 4" LATERALS

CWA
CALDWELL WHITE ASSOCIATES
ENGINEERS / SURVEYORS / PLANNERS
4203 MELROSE AVENUE , P.O. BOX 6260 , ROANOKE, VIRGINIA 24017
(540) 366-3400 , FAX: (540) 366-8702B , E-Mail: CWARoanoke@AOL.COM

STANDARD SANITARY SEWER DETAILS
for
ROBERT SCHNEIDER CONSTRUCTION CO.
ROANOKE CITY, VIRGINIA

City of Roanoke
Office of City Engineer
215 Church Avenue
Room 350
Roanoke, Virginia 24011
(540) 981-2731
ROANOKE VIRGINIA, CHARTERED 1882

Sheet
C-3