1. BEDDING, HAUNCHING AND INITIAL BACKFILL CONSTRUCTION SHALL BE IN ACCORDANCE WITH THIS DETAIL AND MANUFACTURER'S RECOMMENDATION.
2. ALL PVC PIPE SHALL BE BEDDED IN COMPACTED VDOT #57 OR #68 STONE, OR CRUSHER RUN.
3. IN AREAS SUBJECTED TO VEHICULAR TRAFFIC, BEDDING STONE AND FILL SHALL BE PLACED IN 6" LIFTS FROM BOTTOM OF TRENCH TO 1' ABOVE THE PIPE AND THE REMAINING SHALL BE PLACED IN 10" LIFTS AND SHALL BE COMPACTED TO AT LEAST 90% OF MAXIMUM DENSITY AS DETERMINED BY ASTM D 698.
4. BEDDING REQUIREMENTS FOR DUCTILE IRON WATER LINE ARE DEPENDENT ON MANUFACTURER'S BEDDING CRITERIA.
5. ALL EXCAVATIONS SHALL COMPLY WITH OSHA TECHNICAL MANUAL, CHAPTER 2, TITLED "EXCAVATIONS: HAZARD RECOGNITION IN TRENCHING AND SHORING."
6. THE TRACER WIRE SHALL BE PLACED ALONG THE LOWER QUADRANT OF THE PIPE. THE WIRE SHALL NOT TOUCH THE PIPE, BUT SHALL BE A MAXIMUM OF 6" FROM THE PIPE. NON-METALLIC SPACERS MAY BE USED TO MAINTAIN A SET DISTANCE FROM THE UTILITY.

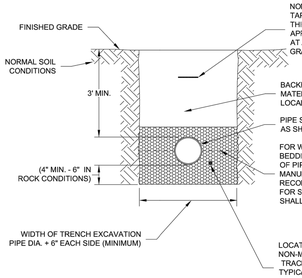

WESTERN VIRGINIA REGIONAL - CONSTRUCTION DETAIL

BEDDING AND BACKFILL OUTSIDE OF PAVED AREAS — 08/01/15 — **G-11**

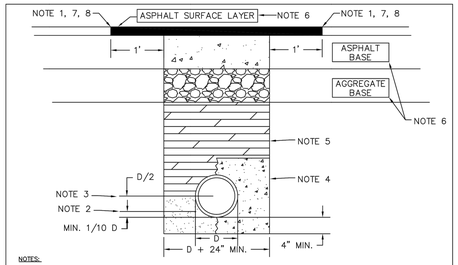

NOTES:

1. ALL PAVEMENTS SHALL BE SAW CUT WITH NEAT, UNIFORM LINES PRIOR TO EXCAVATION.
2. PIPE BEDDING MATERIAL SHALL BE CRUSHER RUN (VDOT NO. 25 OR 26) OR OPEN GRADED AGGREGATE (VDOT NO. 57, 68, 7, OR 8). ALTERNATE MATERIAL MUST BE APPROVED BY THE CITY ENGINEER.
3. MAXIMUM DEPTH OF PIPE BEDDING MATERIAL IF USING OPEN GRADED AGGREGATE FOR BEDDING.
4. OPTIONAL CONCRETE ENCASEMENT FOR POWER OR COMMUNICATION CONDUIT. PROVIDE A MINIMUM OF 4" CONCRETE COVER FROM ALL SIDES OF CONDUIT.
5. BACKFILL MATERIAL SHALL BE VDOT NO. 21A AGGREGATE, PLACED IN LOOSE LIFTS NOT EXCEEDING 6", AND COMPACTED TO AT LEAST 95% MAXIMUM DRY DENSITY WITHIN 2 PERCENTAGE POINTS OF OPTIMUM MOISTURE (VTM-1) WITH THE USE OF MECHANICAL TAMPERS OR VIBRATORY ROLLERS. WATER COMPACTION IS NOT PERMITTED. TYPE I SELECT MATERIAL MAY BE USED AS BACKFILL UPON PRIOR APPROVAL BY THE CITY ENGINEER. MATERIAL CLASSIFICATION SHALL BE PERFORMED ON THE ACTUAL SOIL TO VERIFY THAT SOIL MEETS VDOT SPECIFICATIONS FOR TYPE I SELECT MATERIAL BY A QUALIFIED TESTING LABORATORY AND TEST RESULTS SHALL BE CERTIFIED BY A VIRGINIA REGISTERED PROFESSIONAL ENGINEER. DENSITY REQUIREMENTS ARE THE SAME AS ABOVE, HOWEVER, MOISTURE CONTENT FOR SOILS MAY BE WITHIN 20% OF OPTIMUM.

   ALL TESTING SHALL BE PERFORMED AND CERTIFIED BY A GEOTECHNICAL ENGINEER OR A VDOT-CERTIFIED TECHNICIAN. RESULTS SHALL BE PROVIDED TO THE INSPECTOR WITHIN 24 HOURS OF TESTING COMPLETION. THE COST OF ALL TESTING IS THE RESPONSIBILITY OF THE PERMITTEE. FIELD DENSITY TESTING METHODS SHALL BE APPROVED BY THE CITY ENGINEER PRIOR TO PERFORMING ANY TESTING.
6. ALL ASPHALT PAVEMENT DEPTHS SHALL BE DETERMINED BY THE PRESENCE OF LANE STRIPING ON THE STREET. FOR STREETS WITH LANE STRIPING, THE MINIMUM DEPTH SHALL BE 8" AND CONSIST OF TWO 3" LIFTS OF ASPHALT BASE MIX AND ONE 2" LIFT OF ASPHALT SURFACE MIX. FOR STREETS WITHOUT LANE STRIPING, THE MINIMUM DEPTH SHALL BE 4 INCHES AND CONSIST OF ONE 2-1/2" LIFT OF ASPHALT BASE MIX AND ONE 1-1/2" LIFT OF ASPHALT SURFACE MIX. THE ASPHALT SURFACE LAYER SHALL EXTEND OVER UNDISTURBED BASE A MINIMUM OF 12" ON ALL SIDES. ALL PAVEMENT MATERIALS SHALL MEET VDOT REQUIREMENTS FOR SURFACE MIX (SM-9.5A, SM-9.5A, OR SM-12.5D), BASE MIX (BM-25), AND STONE AGGREGATE (21A OR 21B). PLANT CERTIFICATION FOR EACH MIX INCORPORATED INTO THE WORK SHALL BE PROVIDED TO THE INSPECTOR. WHEN MATCHING NON-STANDARD MATERIALS, THE INSPECTOR SHALL DETERMINE AN ACCEPTABLE MATERIAL.
7. THE REPAIR SHALL BE RECTANGULAR AND SAW CUT IN STRAIGHT, UNIFORM LINES THAT ARE ALIGNED WITH THE STREET CENTERLINE. WHEN EDGES OF PAVEMENT HAVE BEEN UNDERMINED, PAVEMENT SHALL BE REMOVED TO A NEAT LINE 12" BEYOND THE UNDERMINED AREA. ANY INITIAL PAVEMENT REPAIR WITH AN AREA GREATER THAN 40 SQUARE FEET MAY BE NON-RECTANGULAR, HOWEVER, THE REPAIR SHALL BE SAW CUT IN STRAIGHT, UNIFORM LINES. ANY OTHER DEVIATION ON PATCH SHAPE MUST BE APPROVED BY THE INSPECTOR PRIOR TO THE REPAIR BEING MADE. THE FINISHED PATCH SURFACE SHALL BE WITHIN 1/4 INCH AT ANY POINT ACROSS THE PATCH AS IT RELATES TO THE SURROUNDING STREET SURFACE.
8. A FULL COVERAGE TACK COAT IS REQUIRED ON ALL SURFACES THAT WILL CONTACT THE NEW SURFACE LAYER.

OFFICE OF THE CITY ENGINEER – ROANOKE, VIRGINIA

APPROVED _____ CITY ENGINEER

DATE: _____

UTILITY TRENCH REPAIR IN PAVEMENT USING VDOT NO. 21A AGGREGATE — UTR-1

1. SETTER TO BE A.Y. McDONALD 720-215WXDD33, FORD VB72-15W-11-33 OR APPROVED EQUAL.
2. SADDLES MUST BE USED WITH ALL PLASTIC & DUCTILE IRON PIPE. SERVICE SADDLES SHALL BE USED IN ACCORDANCE WITH WATER DISTRIBUTION PIPING SPECIFICATION. SERVICE SADDLES FOR PLASTIC PIPE SHALL BE: POWERSEAL 3417, OR 3412AS, ROMAC 202S, OR 306, OR FORD METER FS202 OR FS303. FOR DUCTILE IRON PIPE USE THE ABOVE OR POWERSEAL 3413, ROMAC 202 OR FORD METER F202.
3. METER BOX SHALL BE CARSON/MID-STATES PLASTICS, INC. PLASTIC BOX WITH FORD "A" DOMESTIC SERIES FRAME WITH A NICOR DOMESTIC 12.25 CX LID WITH SENSUS RECESS AND WVWA LOGO, ADS CORRUGATED HDPE BOX WITH FORD "A" DOMESTIC SERIES FRAME WITH A NICOR DOMESTIC 12.25 CX LID WITH SENSUS RECESS AND WVWA LOGO OR APPROVED EQUAL. METER BOX SHALL NOT BE PLACED IN AREAS SUBJECT TO VEHICULAR TRAFFIC. IF TRAFFIC BEARING BOX IS REQUIRED, DESIGN ENGINEER SHALL CONSULT WITH PARTICIPATING UTILITY TO DETERMINE SITE SPECIFIC REQUIREMENTS.
4. CORPORATION STOP SHALL BE FORD FB1000-4-G-NL, MUELLER B-25008 OR APPROVED EQUAL.
5. SERVICE SHALL BE "K" TYPE COPPER, OR COPPER TUBE SIZE POLYETHYLENE (PE) 4710, SODR-9 (200 psi).
6. WHENEVER SIDEWALK EXISTS OR IS PROPOSED, MODIFY METER LOCATION AS DIRECTED.

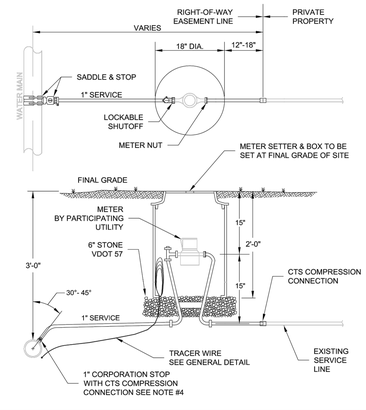

WESTERN VIRGINIA REGIONAL - CONSTRUCTION DETAIL

SINGLE RESIDENTIAL WATER SERVICE (REPLACEMENT OF EXISTING SERVICE) — 09/07/17 — **W-2**

1. SETTER TO BE A.Y. McDONALD 720-215 WXDD33, FORD VB72-15W-11-33 OR APPROVED EQUAL.
2. SADDLES MUST BE USED WITH ALL PLASTIC DUCTILE IRON PIPE. SERVICE SADDLES SHALL BE USED IN ACCORDANCE WITH WATER DISTRIBUTION PIPING SPECIFICATION. SERVICE SADDLES FOR PLASTIC PIPE SHALL BE POWERSEAL 3417, OR 3412AS, ROMAC 202S, OR 306, OR FORD METER FS202 OR FS303. FOR DUCTILE IRON PIPE USE THE ABOVE OR POWERSEAL 3413, ROMAC 202 OR FORD METER F202.
3. METER BOX SHALL BE CARSON/MID-STATES PLASTICS, INC. PLASTIC BOX WITH FORD "A" DOMESTIC SERIES FRAME WITH A NICOR DOMESTIC 12.25 CX LID WITH SENSUS RECESS AND WVWA LOGO, ADS CORRUGATED HDPE BOX WITH FORD "A" DOMESTIC SERIES FRAME WITH A NICOR DOMESTIC 12.25 CX LID WITH SENSUS RECESS AND WVWA LOGO OR APPROVED EQUAL. METER BOX SHALL NOT BE PLACED IN AREAS SUBJECT TO VEHICULAR TRAFFIC. IF TRAFFIC BEARING BOX IS REQUIRED, DESIGN ENGINEER SHALL CONSULT WITH PARTICIPATING UTILITY TO DETERMINE SITE SPECIFIC REQUIREMENTS.
4. WHENEVER SIDEWALK EXISTS OR IS PROPOSED, MODIFY METER LOCATION AS DIRECTED.
5. CORPORATION STOP SHALL BE FORD FB1000-4-G-NL, MUELLER B-25008 OR APPROVED EQUAL.
6. SERVICE SHALL BE "K" TYPE COPPER, OR COPPER TUBE SIZE POLYETHYLENE (PE) 4710, SODR-9 (200 psi).

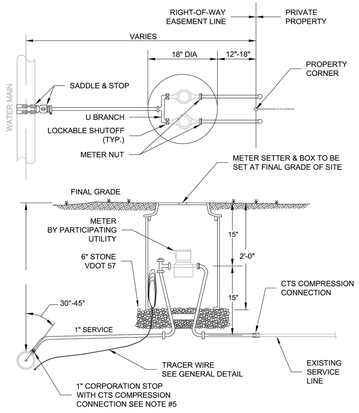

WESTERN VIRGINIA REGIONAL - CONSTRUCTION DETAIL

DOUBLE RESIDENTIAL WATER SERVICE (REPLACEMENT OF EXISTING SERVICE) — 09/07/17 — **W-4E**

1. ALL METERS ARE TO BE PROVIDED AND INSTALLED BY PARTICIPATING UTILITY AT OWNER/DEVELOPER'S EXPENSE. METER BOX, SERVICE, AND SETTER TO BE FURNISHED AND INSTALLED BY OWNER/DEVELOPER IN ACCORDANCE WITH THE MINIMUM REQUIREMENTS SHOWN BELOW.
2. SADDLES MUST BE USED WITH ALL PLASTIC & DUCTILE IRON PIPE. SERVICE SADDLES SHALL BE USED IN ACCORDANCE WITH WATER DISTRIBUTION PIPING SPECIFICATION. SERVICE SADDLES FOR PLASTIC PIPE SHALL BE: POWERSEAL 3417, OR 3412AS, ROMAC 202S, OR 306, OR FORD METER FS202 OR FS303. FOR DUCTILE IRON PIPE USE THE ABOVE OR POWERSEAL 3413, ROMAC 202 OR FORD METER F202.
3. CORPORATION STOP SHALL BE FORD FB1000-4-G-NL, MUELLER B-25008 OR APPROVED EQUAL.
4. METER BOXES LOCATED IN AREAS SUBJECT TO VEHICULAR TRAFFIC SHALL BE CONCRETE WITH H-20 RATED TRAFFIC BEARING HATCH. ALL OTHER METER BOXES SHALL BE CARSON/MID-STATES PLASTICS, INC. PLASTIC BOX, ADS CORRUGATED HDPE BOX, OR APPROVED EQUAL. MINIMUM METER BOX & LID DIAMETERS SHALL BE IN ACCORDANCE WITH SIZING CHART BELOW.
5. SERVICE SHALL BE "K" TYPE COPPER OR P.E. 4710 ,CTS O.D., MINIMUM CELL CLASS 445474E AND 445474D.
6. COPPER METER SETTER TO BE FORD, A.Y. MCDONALD OR APPROVED EQUAL WITH ANGLE DUAL CHECK VALVE AND BYPASS HAVING LOCKABLE SHUTOFF VALVE.
7. SERVICES REQUIRING METERS LARGER THAN 2-INCH SHALL BE REVIEWED BY THE PARTICIPATING UTILITY ON A CASE BY CASE BASIS.

TRAFFIC BEARING LOCATION

TRAFFIC BEARING VAULT AND H-20 RATED HATCH SHALL BE SIZED IN ACCORDANCE WITH DIMENSIONAL REQUIREMENTS SHOWN BELOW.

NON TRAFFIC BEARING LOCATION

SIZING CHART LID

METER SIZE	BOX DIA (MIN.)	LID DIA (MIN.)	COVER & LID MODEL (OR APPROVED EQUAL)
5/8"	18"	11 3/4"	FORD "A" SERIES FRAME & NICOR DOMESTIC 12.25 CX LID WITH SENSUS RECESS AND WVWA LOGO
3/4"- 1"	24"	20"	FORD MC-24-T OR AY MCDONALD 74M24 T
1 1/2"-2"	30"	20"	FORD MC-30-T OR AY MCDONALD 74M30 T

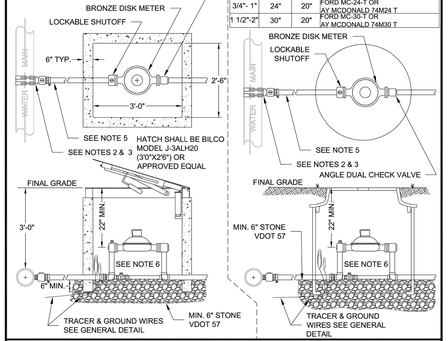

WESTERN VIRGINIA REGIONAL - CONSTRUCTION DETAIL

COMMERCIAL WATER SERVICE METER SIZES 5/8" - 2" — 09/07/17 — **W-5**

1. FILTER FABRIC TO BE INSTALLED BETWEEN BOTTOM OF PIPE AND STONE BEDDING. FABRIC TO EXTEND VERTICALLY A MINIMUM OF 6" FROM BOTTOM OF VAULT (FULL CIRCUMFERENCE).

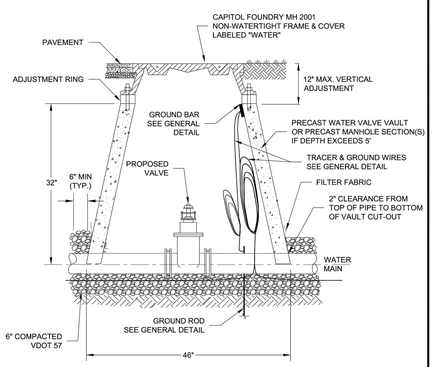

WESTERN VIRGINIA REGIONAL - CONSTRUCTION DETAIL

WATER LINE VALVE & VAULT — 01/01/14 — **W-9**

1. PUBLIC HYDRANTS SHALL BE PAINTED SILVER WITH AN OIL-BASED PAINT. PRIVATE HYDRANTS SHALL ALSO BE PAINTED SILVER WITH AN OIL-BASED PAINT UNLESS OTHERWISE SPECIFIED BY THE JURISDICTIONAL FIRE MARSHALL.
2. FIRE HYDRANT SHALL BE INSTALLED 2' MIN. AND 4' MAX. FROM BACK OF CURB OR 6' MIN. AND 12' MAX. FROM EDGE OF PAVEMENT WHEN CURB IS NOT PRESENT. FIRE HYDRANT TO BE INSTALLED WITHIN RIGHT-OF-WAY OR EASEMENT LINE.
3. AREA AROUND HYDRANT AT A RADIUS OF 4' TO BE LEVEL AND UNOBSTRUCTED.
4. WATERPROOF BAGS OR OUT OF SERVICE RINGS SHALL BE PLACED OVER ALL NEWLY INSTALLED FIRE HYDRANTS.
5. HYDRANT ASSEMBLIES SHALL BE RODDED AND RESTRAINED WITH APPROVED M.J. GLAND RESTRAINTS. HIGH PRESSURE (OVER 150 PSI) ALSO REQUIRES CONCRETE THRUST BLOCKS AS SHOWN BELOW.
6. IF DURING CONSTRUCTION THE SEASONAL WATER LEVEL IS NOTED TO BE ABOVE THE DRAIN OUTLETS OF THE PROPOSED HYDRANT, THE PARTICIPATING UTILITY WILL BE NOTIFIED IMMEDIATELY SO THAT THE HYDRANT CAN BE RELOCATED TO A SUITABLE LOCATION, OMITTED, OR THE DRAIN HOLE PLUGGED.
7. TWO WRAPS OF TRACER WIRE SHALL BE WRAPPED AROUND BASE OF HYDRANT.
8. APPROVED MODELS - AVK MODEL 2780, AFC MODEL B-84-B-5, MUELLER CENTURION A423, KENNEDY K81D OR EQUIVALENT.
9. WHERE HYDRANT LATERAL(S) IS APPROVED BY THE PARTICIPATING UTILITY TO BE LONGER IN LENGTH, MAKING THE CONTINUOUS SECTION OF PIPE ON EACH SIDE OF THE GATE VALVE UNFEASIBLE, RESTRAINED PIPE JOINTS SHALL BE INSTALLED BETWEEN THE TEE AND GATE VALVE IN LIEU OF RODDING. HOWEVER, A RODDED CONTINUOUS SECTION OF PIPE SHALL ALWAYS BE INSTALLED BETWEEN THE GATE VALVE AND HYDRANT.

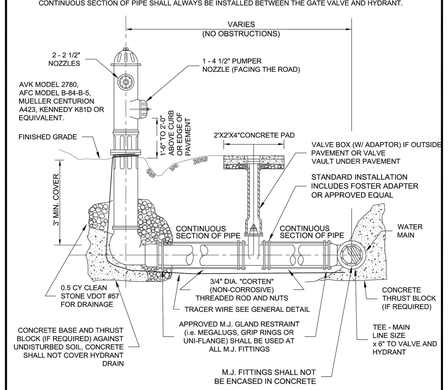

WESTERN VIRGINIA REGIONAL - CONSTRUCTION DETAIL

FIRE HYDRANT ASSEMBLY — 02/10/15 — **W-17**

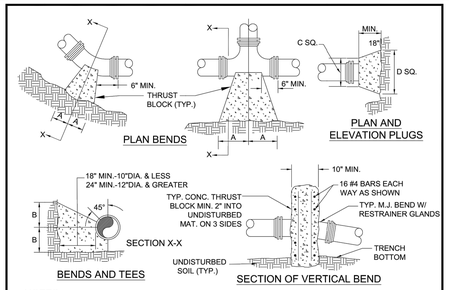

NOTES

1. FOR VERT. BEND DOWN IN EXCESS OF 11 1/4" BEND, ANCHORAGE SHALL BE DESIGNED BY ENGINEER.
2. FOR VERT. BEND UPWARD, BLOCKING TO BE SIMILAR TO THAT FOR HORZ. BEND.
3. GLANDS & BOLTS SHALL BE PROTECTED FROM CONC. WITH PLASTIC SHEETING WHEN POURING THRUST BLOCKS.
4. ALL THRUST BLOCK & SUPPORT CONCRETE SHALL BE 3000 PSI READY MIX CONCRETE.
5. THRUST BLOCKS WITH "B" DIMENSION GREATER THAN 30" SHALL HAVE THE RESTRAINED PIPE INSTALLED WITH A MINIMUM OF 4" OF COVER.
6. REFER TO "MINIMUM THRUST RESTRAINT OF PIPE JOINTS DESIGN LENGTHS" DETAIL FOR WHEN THRUST BLOCKS ARE REQUIRED TO BE USED.
7. WHEN THRUST BLOCK IS REQUIRED BUT NOT FEASIBLE TO CONSTRUCT, THRUST COLLAR SHALL BE USED. SEE "THRUST COLLAR" DETAIL.

PRESSURE = 200psi
BEARING = 2000psf
FACTOR OF SAFETY = 1.5

PIPE SIZE	90° BEND		45° BEND		22 1/2° BEND		11 1/4° BEND		TEE		PLUG	
	A	B	A	B	A	B	A	B	A	B	C	D
4"	8"	12"	8"	8"	6"	6"	6"	6"	11"	9"	10"	6"
6"	18"	12"	8"	10"	8"	8"	8"	8"	11"	10"	12"	18"
8"	18"	13"	10"	10"	8"	8"	8"	8"	11"	12"	12"	24"
10"	20"	16"	12"	14"	8"	12"	8"	12"	14"	16"	16"	30"
12"	20"	16"	12"	14"	8"	12"	8"	12"	14"	16"	16"	30"
16"	26"	20"	16"	18"	11"	13"	11"	13"	18"	20"	20"	36"
24"	82"	42"	62"	30"	44"	22"	22"	16"	82"	42"	82"	42"
30"	185"	42"	100"	42"	52"	42"	40"	30"	185"	42"	185"	42"

WESTERN VIRGINIA REGIONAL - CONSTRUCTION DETAIL

THRUST BLOCK REQUIREMENTS — 02/10/15 — **W-18**

COMMONWEALTH OF VIRGINIA — RYAN P. KINCER — Lic. No. 50119 — 4/30/21 — PROFESSIONAL ENGINEER

Revisions	Date

Issue Date: APR. 30, 2021
Drawn By: RPK/MLC
Designed By: RPK
Checked By: BCC
Date: 4/30/21

Mattern & Craig
ENGINEERS•SURVEYORS
701 FIRST STREET, S.W.
ROANOKE, VIRGINIA 24016
(540) 345-3342
FAX (540) 345-7091

WASHINGTON HEIGHTS WATERLINE REPLACEMENT PHASE 1

DETAILS

ROANOKE, VIRGINIA

Vertical Scale: N/A

Horizontal Scale: N/A

Commission Number: 4095

Sheet No.: 15

I:\4095 - Washington Heights Waterline Replacement\Dwg\4095 PH1 Details.dwg, 4/30/2021 3:33:37 PM, MLC