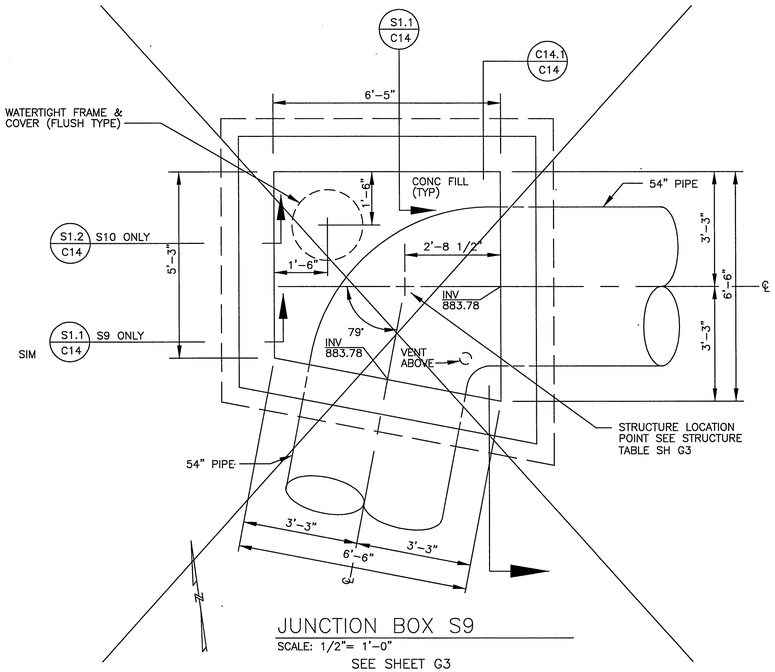

JUNCTION BOX S9

SCALE: 1/2"= 1'-0"

SEE SHEET G3

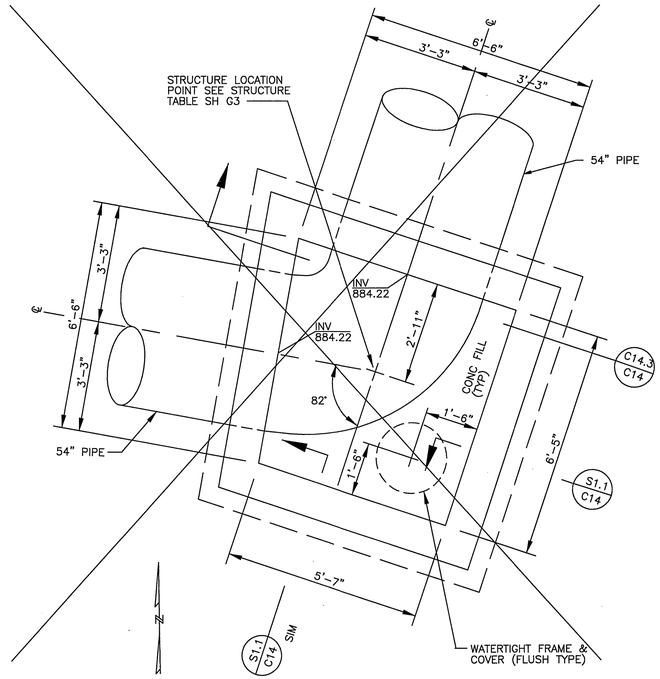

JUNCTION BOX S10

SCALE: 1/2"= 1'-0"

SEE SHEET G3

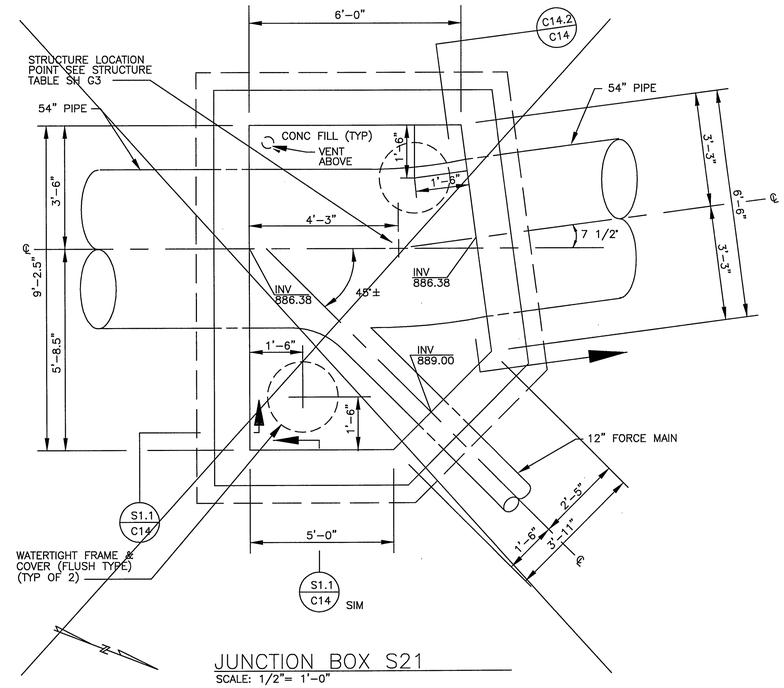

JUNCTION BOX S21

SCALE: 1/2"= 1'-0"

SEE SHEET G3

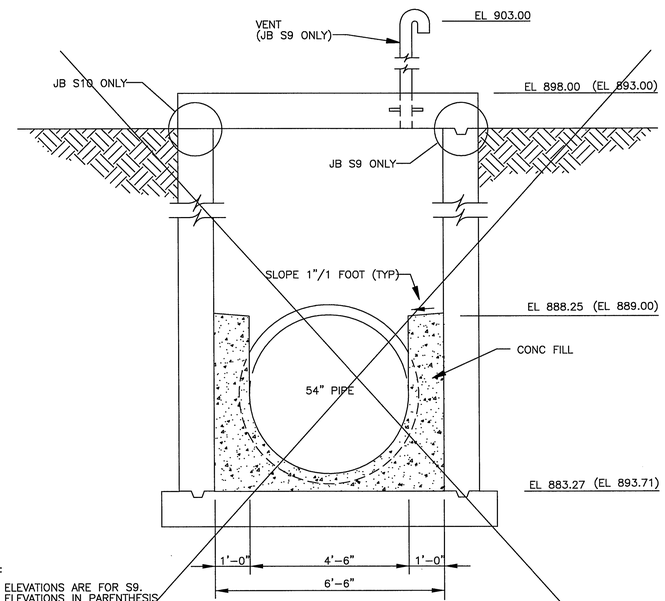

NOTE:

1. ELEVATIONS ARE FOR S9. ELEVATIONS IN PARENTHESIS ARE FOR S10.

SECTION JB S9 & S10

C14.1 / C14

SCALE: 1/2"= 1'-0" (JB S9)
NOT TO SCALE (JB S10)

SEE SHEET G3

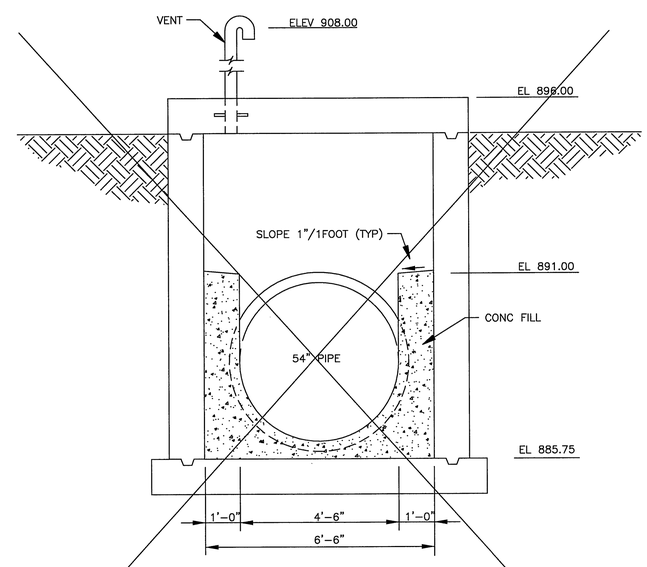

SECTION JB S21

C14.2 / C14

SCALE: 1/2"= 1'-0"

SEE SHEET G3

NOTE:

CONCRETE FILL IS CLASS A CONCRETE. CONCRETE FILL MUST ATTAIN A COMPRESSIVE STRENGTH OF 3000 psi PRIOR TO DIVERTING FLOW THROUGH A STRUCTURE.

HAYES, SEAY, MATTERN & MATTERN, INC.

ARCHITECTS/ENGINEERS/PLANNERS
ROANOKE, VIRGINIA

DESIGNED: DMH
DRAWN: MHL
CHECKED:
APPROVED:

REVISIONS		
DATE	BY	DESCRIPTION
10/15/98	MNH	RECORD DRAWINGS SEE SHEET G1 FOR NOTE

GRAPHIC SCALE

1/2" = 1'-0" 12"6" 0 1' 2' 3' 4' 5'

TINKER CREEK INTERCEPTOR SEWER
CITY OF ROANOKE, VIRGINIA

JUNCTION BOXES S9, S10 & S21,
PLAN AND SECTION

COMM. NO.: 7211 | SCALE: AS NOTED | DATE: MAY 17, 1996

PROJECT NO.: 6317

CONTRACT A

SHEET NO.

C14

RECORD DRAWINGS

7211C14A C7211 11SEPT98 REV. C ACAD MNH PLOT SCALE: 1=24 XREF: NONE