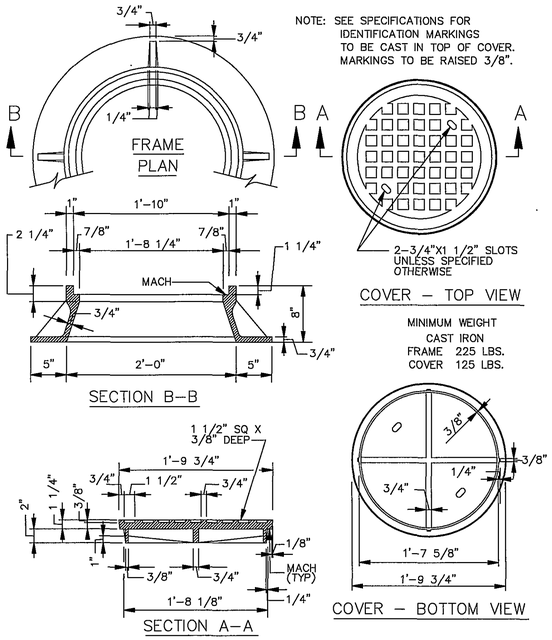

STANDARD BUILT-UP FRAME & COVER
NO SCALE

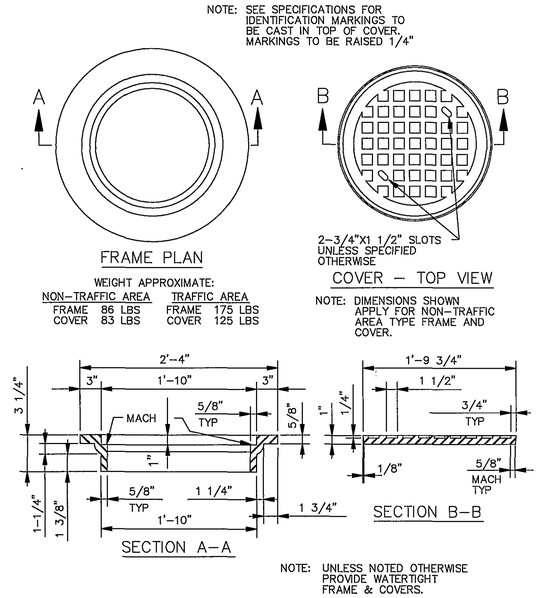

STANDARD FRAME & COVER (FLUSH TYPE)
NO SCALE

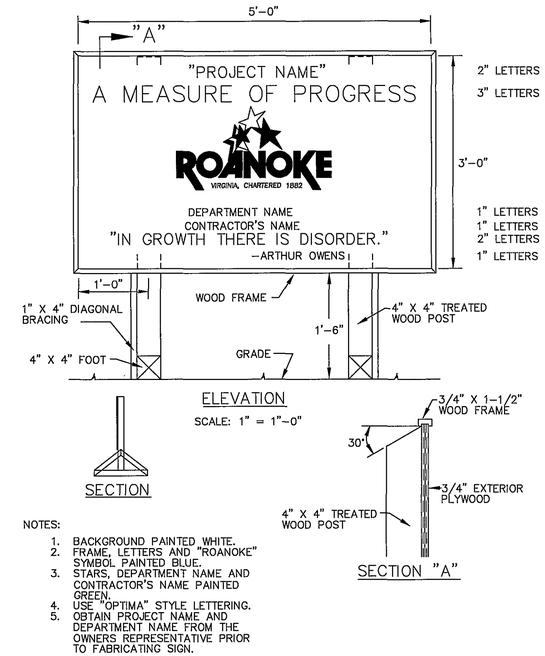

PROJECT SIGN
AS NOTED

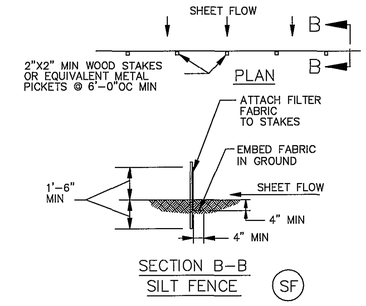

SILT FENCE
NO SCALE

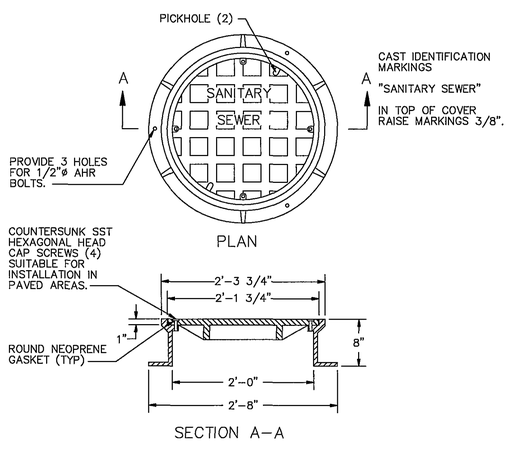

WATERTIGHT FRAME & COVER (BUILT-UP TYPE)
SCALE: 1" = 1'-0"

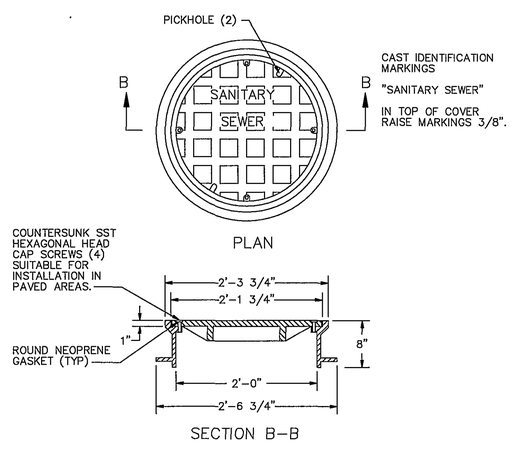

WATERTIGHT FRAME & COVER (FLUSH TYPE)
SCALE: 1" = 1'-0"

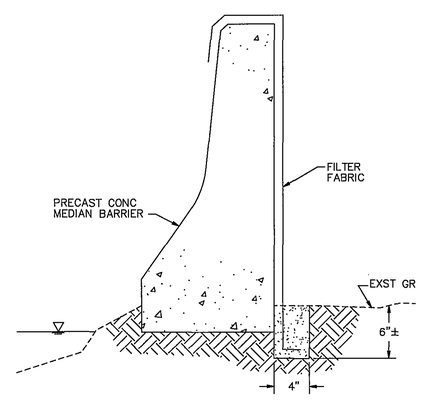

SILT FENCE CLOSE TO STREAMS
NO SCALE

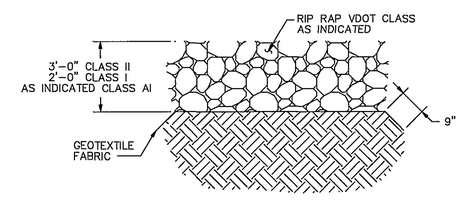

RIP RAP
NO SCALE

HAYES, SEAY, MATTERN & MATTERN, INC.
ARCHITECTS/ENGINEERS/PLANNERS
ROANOKE, VIRGINIA

DESIGNED: DMH
DRAWN: MHL
CHECKED:
APPROVED:

REVISIONS

DATE	BY	DESCRIPTION
10/15/98	MNH	RECORD DRAWINGS SEE SHEET G1 FOR NOTE

GRAPHIC SCALE
1" = 1'-0" 12" 9" 6" 3" 0 1' 2'

TINKER CREEK INTERCEPTOR SEWER
CITY OF ROANOKE, VIRGINIA

SITE DETAILS

COMM. NO.: 7211 | SCALE: AS NOTED | DATE: MAY 17, 1996

PROJECT NO.: 6317
CONTRACT B
SHEET NO.
C18
RECORD DRAWINGS

7211C18B C7211 17MY96 REV. A ACAD ML/AF PLOT SCALE: 1=24 XREF: NONE