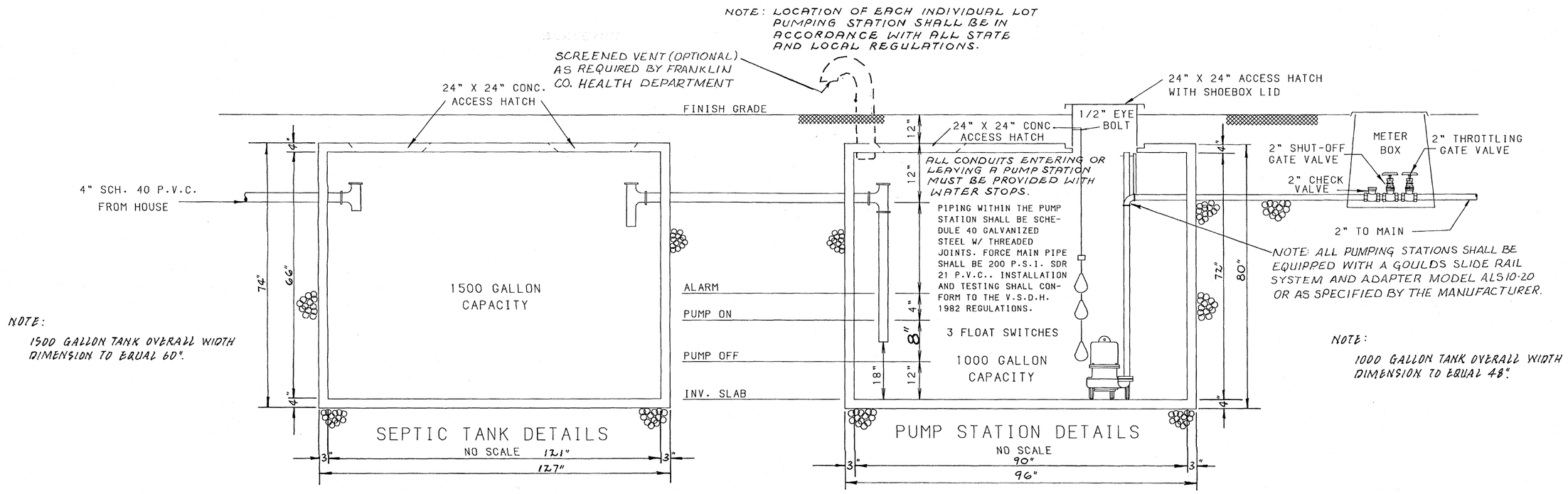

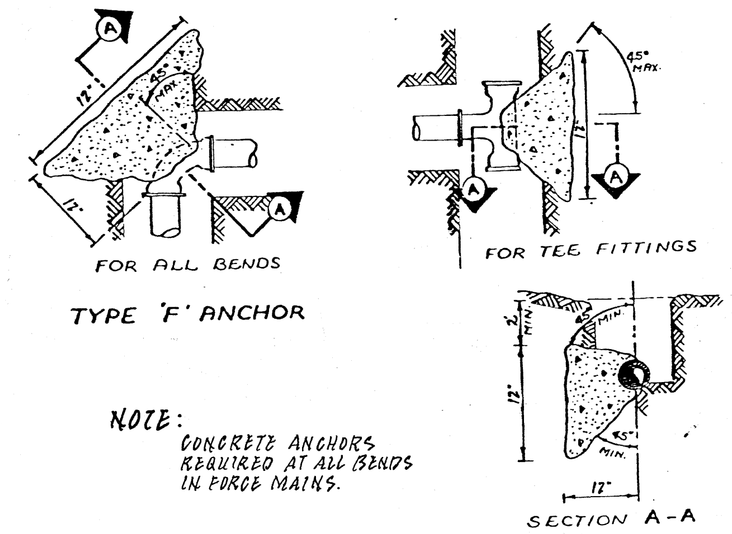

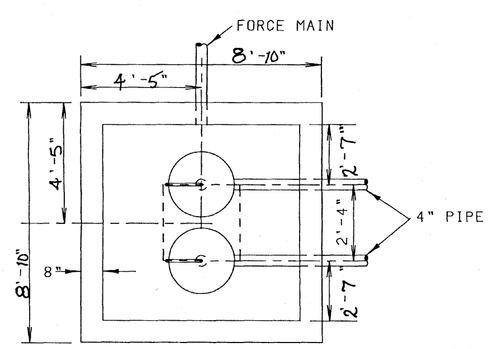

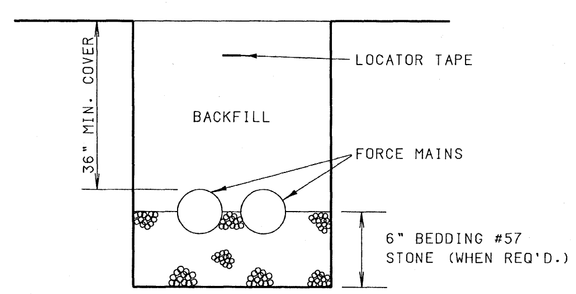

FORCE MAIN TRENCH DETAIL

NO SCALE

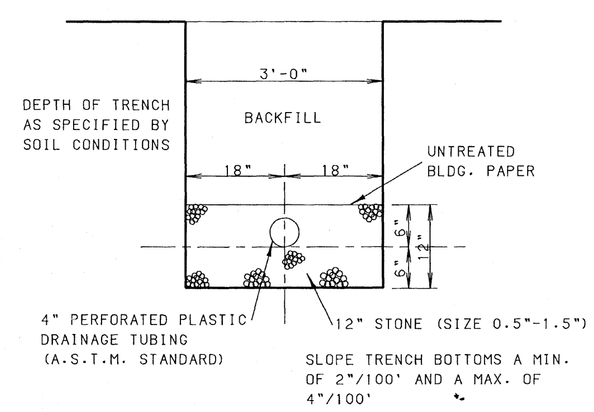

TYPICAL ABSORPTION TRENCH

NO SCALE

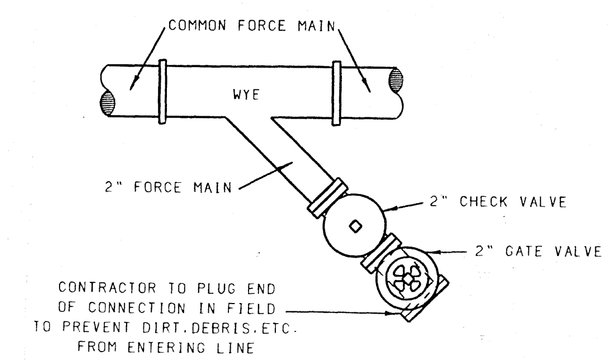

SAN. SEWER CONNECTION DETAIL

NO SCALE

SIPHON	TOP ELEV.	INV. ELEV.
1	869.5	864.5
2	869.5	864.5
3	860.3	855.3

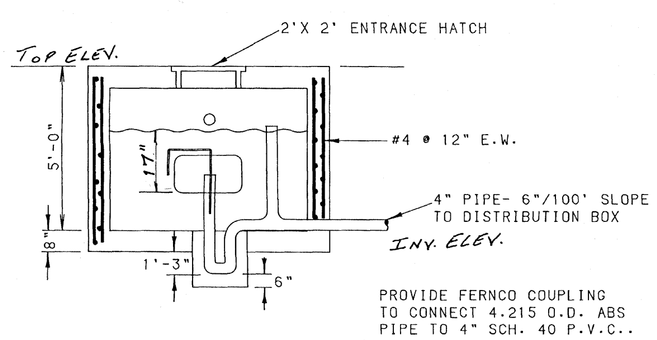

DOSING SIPHON VAULT

NO SCALE

NOTE: VAULT MUST PROVIDE 600 GAL. DOSING VOLUME.

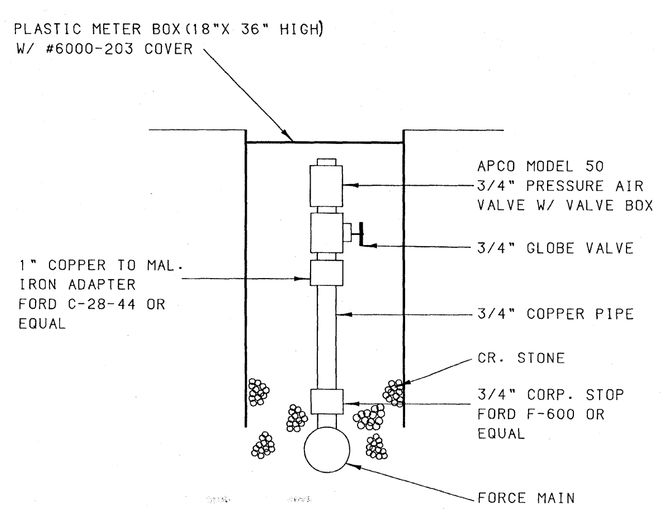

AIR RELEASE VALVE

NOTE: 3/4" SCH. 40 IN LIEU OF COPPER IS ACCEPTABLE

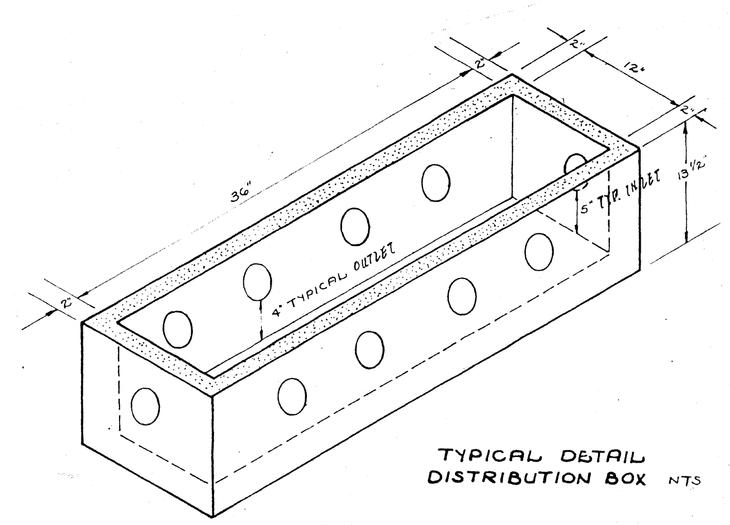

TYPICAL DETAIL DISTRIBUTION BOX NTS

BERKLEY HOWELL & ASSOC., P.C.
ENGINEERS • SURVEYORS • PLANNERS
LYNCHBURG, VA. SMITH MT. LAKE

MISC. DETAILS
CONTENTMENT ISLAND SEWERAGE FACILITIES

DATE: 9/11/89
TECHNICIAN:
CHECKED BY:

REVISIONS

NO.	DATE

SCALES AS SHOWN

PROJ. NO. 89134S | DIV.

SHEET NO. 9 OF 9

DRAWING NO. 89134S

SURVEY DATUM USED:

FIELDBOOK IDENTIFICATION:

VIEWS TO CREATE THIS DRAWING:

MANUSCRIPT DRAWING NUMBER: