ECN 10

Revised

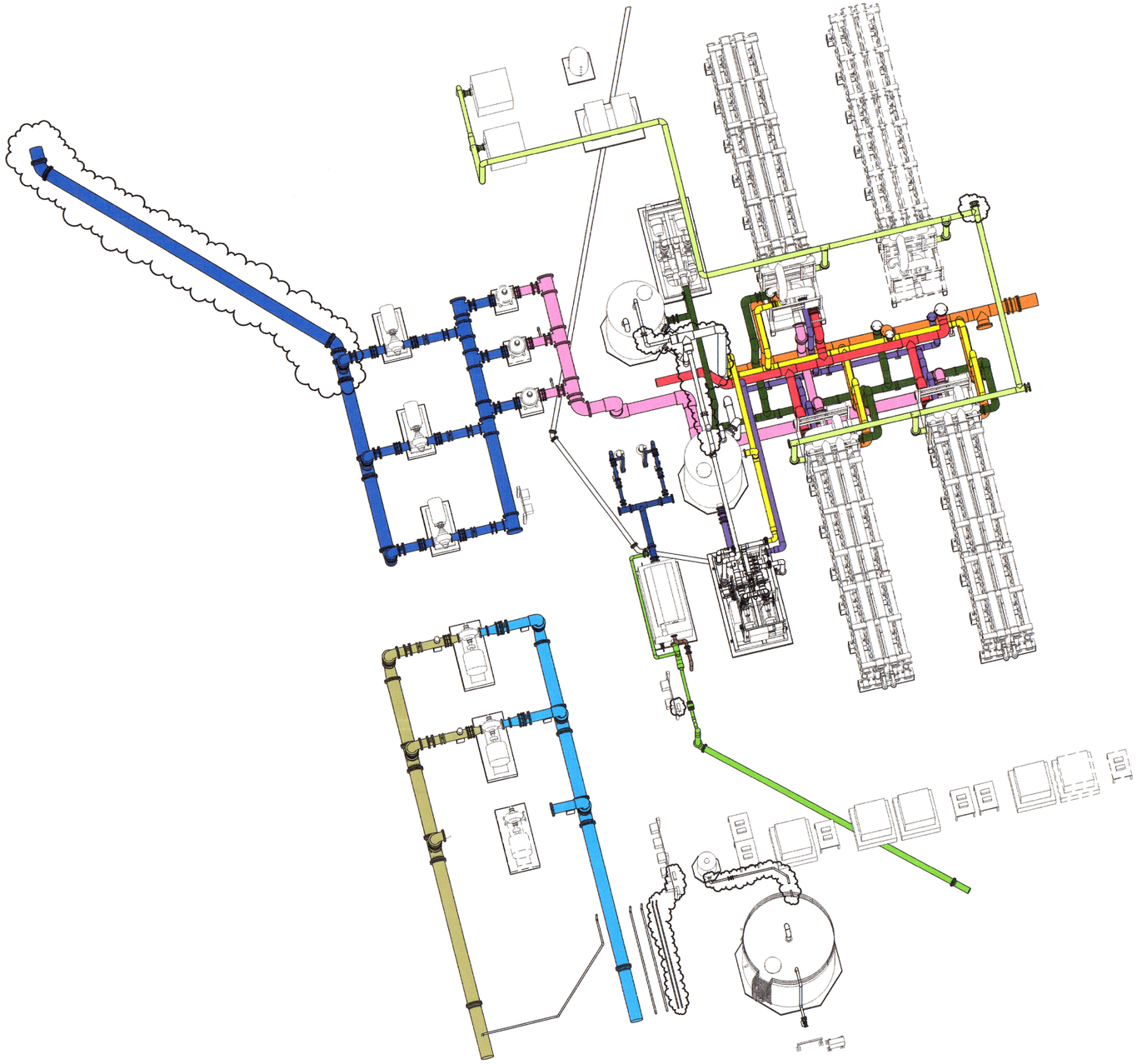

OVERALL PERSPECTIVE

PIPE SYSTEM LEGEND

- 1ST STAGE FEED
- 1ST STAGE BACKPULSE
- 1ST STAGE PERMEATE
- 1ST STAGE REJECT
- CIP FEED
- CIP RETURN
- DISC FILTER INFLUENT
- DISC FILTER EFFLUENT
- DISC FILTER BACKWASH WASTE
- RAW WATER INTAKE
- AIR LINE
- DRAIN LINE
- FINISHED WATER FEED
- FINISHED WATER DISCHARGE
- BACKWASH WASTE

ISSUED FOR CONSTRUCTION

NO.	BY	CHK	APP	DATE	REVISIONS AND RECORD OF ISSUE
1	MAK	MBS	PJD	03/30/16	GENERAL REVISIONS
0	MAK	MBS	PJD	12/09/15	ISSUED FOR CONSTRUCTION

PW: R:\dms21275\30-#-30-MEMBRANE-01.PVT
SAVED: 4/4/2016 11:51:37 AM
PLOTTED:
USER:
XREF1:
XREF2:
XREF3:
XREF4:
DWG VER: 1

BLACK & VEATCH
Building a world of difference.
Black & Veatch Corporation
Virginia Beach, VA

BEDFORD REGIONAL WATER AUTHORITY
SMITH MOUNTAIN LAKE WTP &
RAW WATER PUMPING STATION / INTAKE

MECHANICAL
MEMBRANE/ADMIN BUILDING
OVERALL PERSPECTIVE

DESIGNED: MBS
DETAILED: MAK
CHECKED: MBS
APPROVED: PJD
DATE: 12/09/15

0 1/2 1
IF THIS BAR DOES NOT MEASURE 1" THEN DRAWING IS NOT TO FULL SCALE

PROJECT NO.
182262

M-30-001
SHEET
OF -

D7000

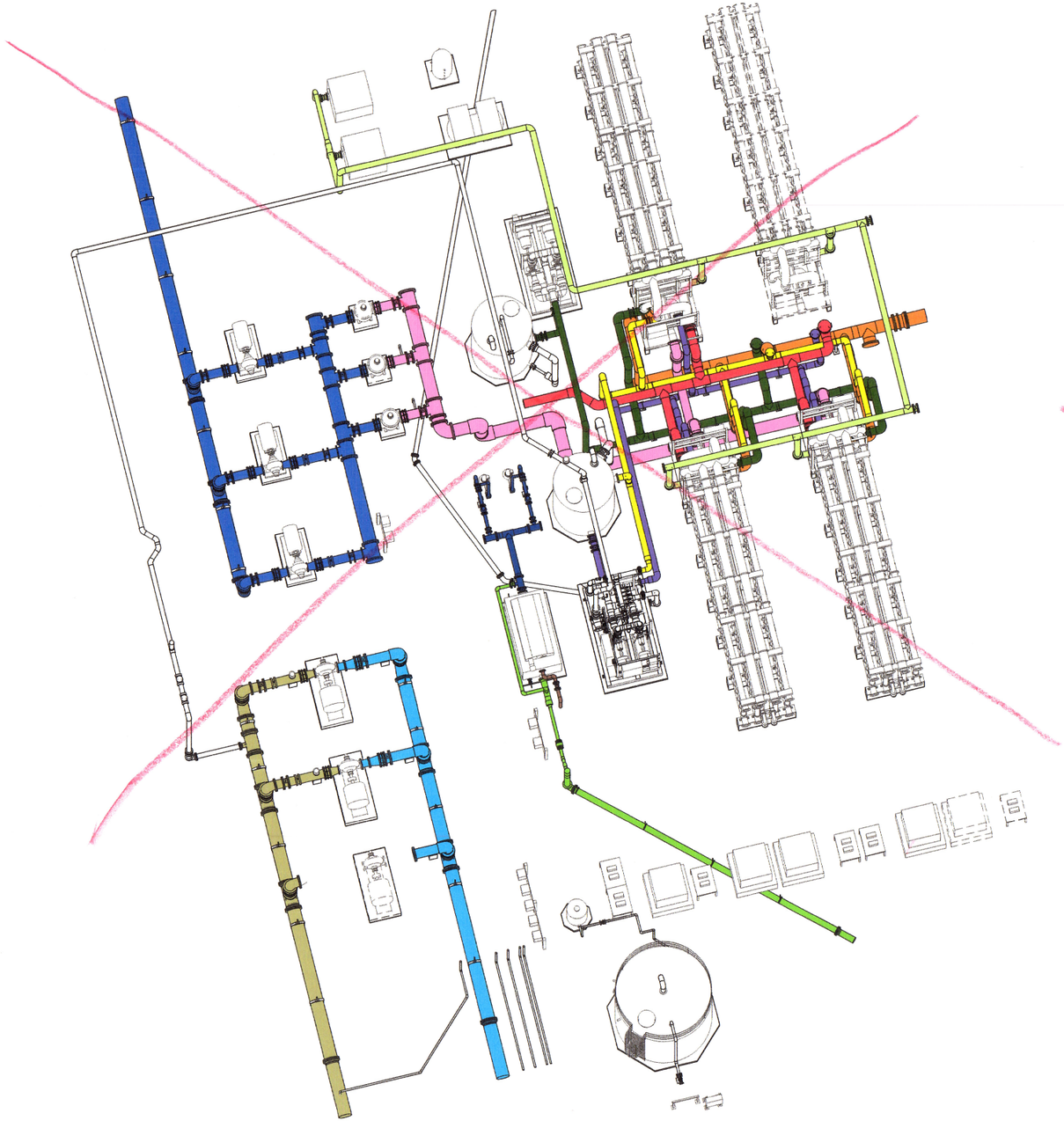

OVERALL PERSPECTIVE

SEE Revised

PIPE SYSTEM LEGEND

- 1ST STAGE FEED
- 1ST STAGE BACKPULSE
- 1ST STAGE PERMEATE
- 1ST STAGE REJECT
- CIP FEED
- CIP RETURN
- DISC FILTER INFLUENT
- DISC FILTER EFFLUENT
- DISC FILTER BACKWASH WASTE
- RAW WATER INTAKE
- AIR LINE
- DRAIN LINE
- FINISHED WATER FEED
- FINISHED WATER DISCHARGE
- BACKWASH WASTE

ISSUED FOR CONSTRUCTION

DATE	REVISIONS AND RECORD OF ISSUE	NO.	BY	CHK	APP
12/09/15	ISSUED FOR CONSTRUCTION	0	MAK	MBS	PJD

PW: R:\dms21275\30-M-30-MEMBRANE-B1.rvt
SW:
SAVED: 12/9/2015 4:21:29 PM
PLOTTED:
USER:
DWG VER:
XREF1:
XREF2:
XREF3:
XREF4:

COMMONWEALTH OF VIRGINIA
PAUL J. DELPHOS
Lic. No. 0208[illegible]
PROFESSIONAL ENGINEER

BLACK & VEATCH
Building a world of difference.
Black & Veatch Corporation
Virginia Beach, VA

BEDFORD REGIONAL WATER AUTHORITY
SMITH MOUNTAIN LAKE WTP &
RAW WATER PUMPING STATION / INTAKE

MECHANICAL
MEMBRANE/ADMIN BUILDING
OVERALL PERSPECTIVE

DESIGNED: MBS
DETAILED: MAK
CHECKED: MBS
APPROVED: PJD
DATE: 12/09/15

0 1/2 1
IF THIS BAR DOES NOT MEASURE 1" THEN DRAWING IS NOT TO FULL SCALE

PROJECT NO.
182262

M-30-001
SHEET
OF -

D7000

ECN 10

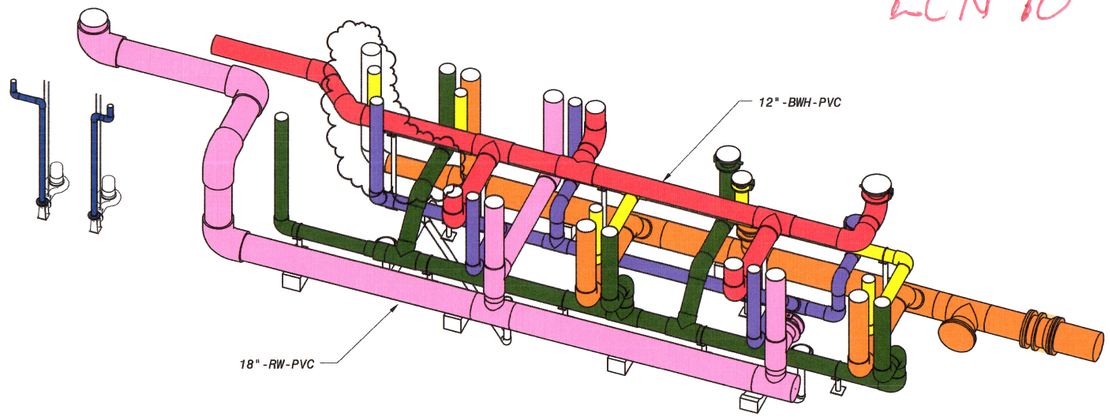

TRENCH PERSPECTIVE

Revised

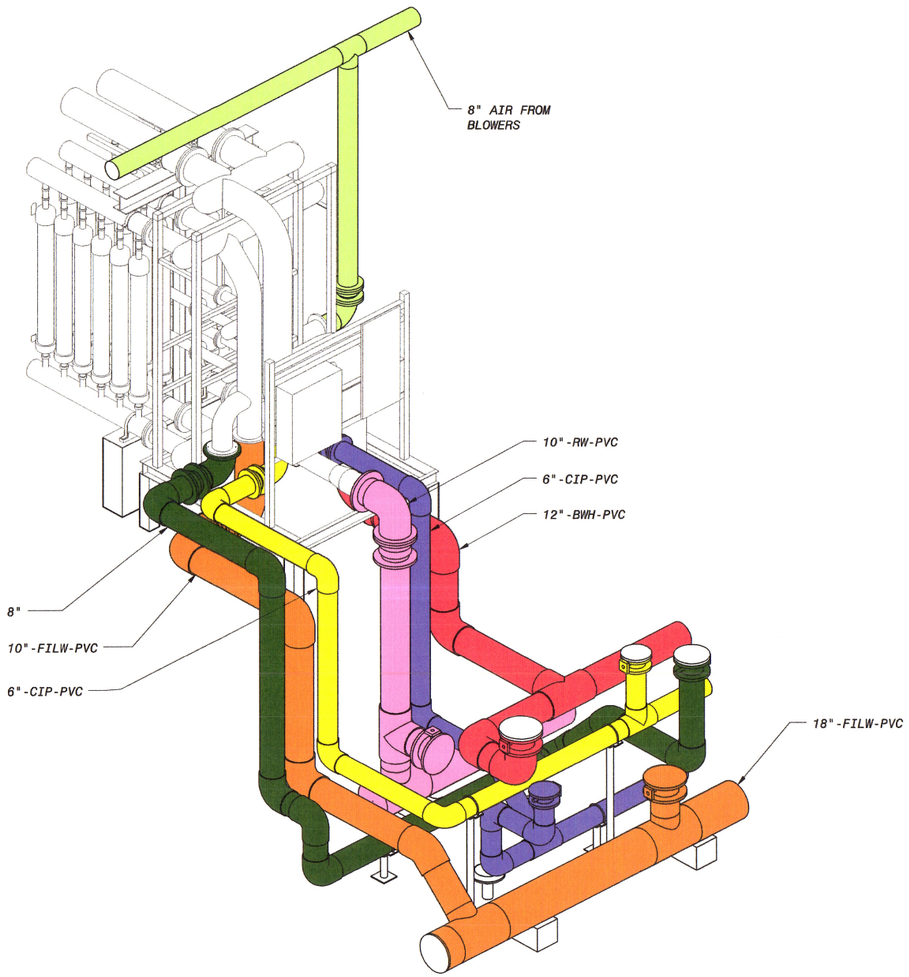

1ST STAGE MEMBRANE PERSPECTIVE

PIPE SYSTEM LEGEND

- 1ST STAGE FEED
- 1ST STAGE BACKPULSE
- 1ST STAGE PERMEATE
- 1ST STAGE REJECT
- CIP FEED
- CIP RETURN
- DISC FILTER INFLUENT
- DISC FILTER EFFLUENT
- DISC FILTER BACKWASH WASTE
- RAW WATER INTAKE
- AIR LINE
- DRAIN LINE
- FINISHED WATER FEED
- FINISHED WATER DISCHARGE
- BACKWASH WASTE

ISSUED FOR CONSTRUCTION

NO.	BY	CHK	APP	GENERAL REVISIONS	DATE
1	MAK	MBS	PJD		
0	MAK	MBS	PJD	ISSUED FOR CONSTRUCTION	12/09/15
				REVISIONS AND RECORD OF ISSUE	03/30/16

PW: R:\dms21275\30-M-30-MEMBRANE-B1.rvt
SW:
SAVED: 4/4/2016 11:52:11 AM
PLOTTED:
USER:
XREF1:
XREF2:
XREF3:
XREF4:
DWG VER: 1

BLACK & VEATCH
Building a world of difference.
Black & Veatch Corporation
Virginia Beach, VA

BEDFORD REGIONAL WATER AUTHORITY
SMITH MOUNTAIN LAKE WTP &
RAW WATER PUMPING STATION / INTAKE

MECHANICAL
MEMBRANE/ADMIN BUILDING
PERSPECTIVES

DESIGNED:	MBS
DETAILED:	MAK
CHECKED:	MBS
APPROVED:	PJD
DATE:	12/09/15

0 1/2 1
IF THIS BAR DOES NOT MEASURE 1" THEN DRAWING IS NOT TO FULL SCALE

PROJECT NO.
182262

M-30-002
SHEET
OF -

D7000

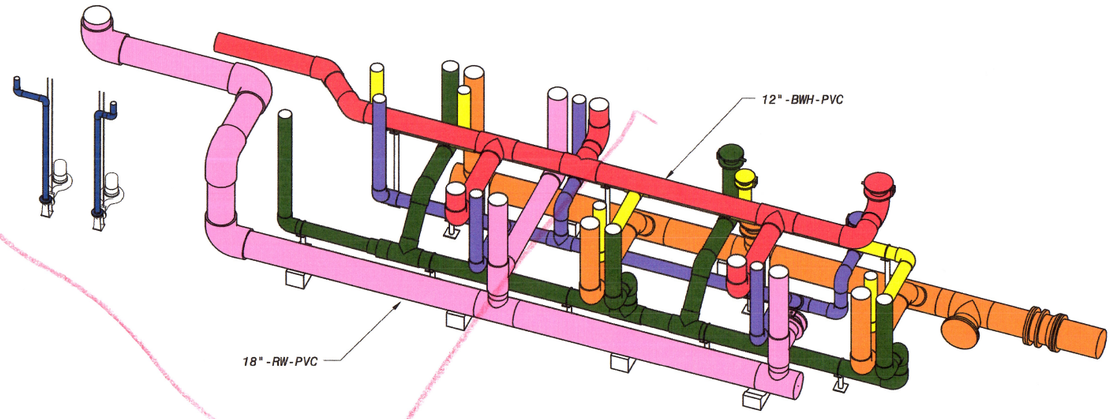

TRENCH PERSPECTIVE

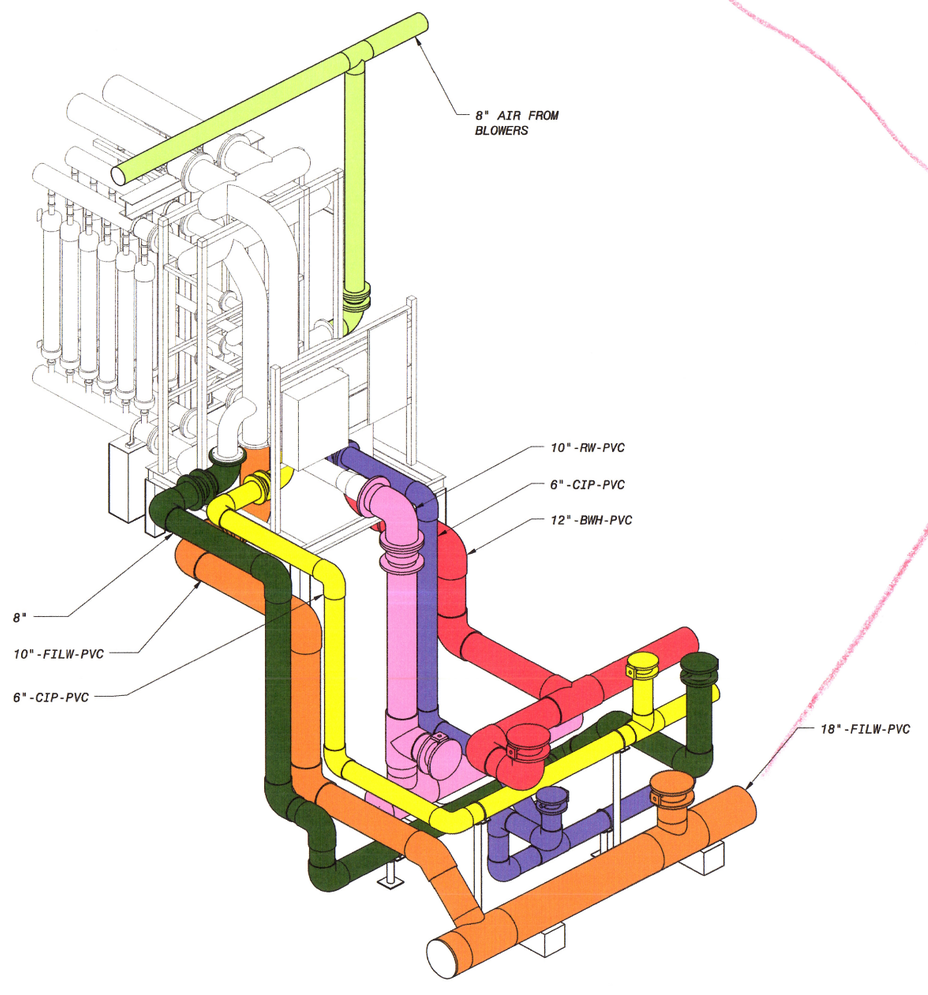

1ST STAGE MEMBRANE PERSPECTIVE

SEE REVISED

PIPE SYSTEM LEGEND

- 1ST STAGE FEED
- 1ST STAGE BACKPULSE
- 1ST STAGE PERMEATE
- 1ST STAGE REJECT
- CIP FEED
- CIP RETURN
- DISC FILTER INFLUENT
- DISC FILTER EFFLUENT
- DISC FILTER BACKWASH WASTE
- RAW WATER INTAKE
- AIR LINE
- DRAIN LINE
- FINISHED WATER FEED
- FINISHED WATER DISCHARGE
- BACKWASH WASTE

ISSUED FOR CONSTRUCTION

DATE	REVISIONS AND RECORD OF ISSUE	NO.	BY	CHK	APP
12/09/15	ISSUED FOR CONSTRUCTION	0	MAK	MBS	PJD

PW: R:\dms21275\3D-M-30-MEMBRANE-B1.rvt
SW:
SAVED: 12/9/2015 4:22:06 PM
PLOTTED:
USER:
DWG VER:
XREF1:
XREF2:
XREF3:
XREF4:

COMMONWEALTH OF VIRGINIA
PAUL J. DELPHOS
Lic. No. 028881
PROFESSIONAL ENGINEER

BLACK & VEATCH
Building a world of difference.
Black & Veatch Corporation
Virginia Beach, VA

BEDFORD REGIONAL WATER AUTHORITY
SMITH MOUNTAIN LAKE WTP &
RAW WATER PUMPING STATION / INTAKE

MECHANICAL
MEMBRANE/ADMIN BUILDING
PERSPECTIVES

DESIGNED: MBS
DETAILED: MAK
CHECKED: MBS
APPROVED: PJD
DATE: 12/09/15

0 1/2 1
IF THIS BAR DOES NOT MEASURE 1" THEN DRAWING IS NOT TO FULL SCALE

PROJECT NO.
182262

M-30-002
SHEET
OF -

D7000

RFI 43

ECN 10

RFI 48

Revised

NOCI-TNK-1

FUTURE CORROSION CONTROL

SODIUM BISULFITE

CITRIC ACID

HYDROCHLORIC ACID

SODIUM HYDROXIDE

NOCI DAY TANK

WATER QUALITY SAMPLE STATION NO.2

WATER QUALITY SAMPLE STATION NO.3

FUTURE HIGH SERVICE PUMP

MEMBRANE SKID (PROVIDED BY GE) (TYP OF 3)

SEE NOTE 2

CIP SKID (PROVIDED BY GE)

DISC FILTER

CIP TANK (PROVIDED BY GE)

WATER QUALITY SAMPLE STATION NO.1

HIGH SERVICE PUMP (TYP OF 2)

MEMBRANE FEED PUMP (PROVIDED BY GE) (TYP OF 3)

SEE NOTE 1

18" PERMEATE

BACKPULSE TANK (PROVIDED BY GE)

BACKPULSE SKID (PROVIDED BY GE)

AIR COMPRESSOR (PROVIDED BY GE)

SELF CLEANING STRAINER (PROVIDED BY GE) (TYP OF 2)

FUTURE SELF CLEANING STRAINER

LOW PRESSURE BLOWER (PROVIDED BY GE) (TYP OF 2)

FUTURE MEMBRANE SKID (PROVIDED BY GE)

AIR COMPRESSOR TANK (PROVIDED BY GE)

NOTES:

1. ALL HARD-PIPE CONNECTIONS TO MEMBRANE SKIDS SHALL REQUIRE A FLEXIBLE CONNECTION.
2. ROUTE CHEMICAL PIPING TO MEMBRANE SYSTEM IN LIPPED PIPE TRAY (CLEAR) TO SKIDS AND CIP/BACKPULSE SYSTEM. SLOPE TRAY TOWARDS TRENCH. PROVIDE TRAY DRAIN PIPE AT TRENCH AND ROUTE TO DRAIN BELOW TRENCH.

MEMBRANE/ADMIN BUILDING - OPERATING FLOOR PLAN

1/8" = 1'-0"

ISSUED FOR CONSTRUCTION

NO.	BY	CHK	APP	DATE	REVISIONS AND RECORD OF ISSUE
0	MAK	MBS	PJD	12/09/15	ISSUED FOR CONSTRUCTION
1	MAK	MBS	PJD	03/30/16	GENERAL REVISIONS

PW: R:\dms21275\30-M-30-MEMBRANE-B1.rvt
SAVED: 4/4/2016 2:33:36 PM
PLOTTED:
USER:
DWG VER: 1
XREF1:
XREF2:
XREF3:
XREF4:

BLACK & VEATCH
Building a world of difference.®
Black & Veatch Corporation
Virginia Beach, VA

COMMONWEALTH OF VIRGINIA
PAUL J. DELPHOS
Lic. No. 036891

BEDFORD REGIONAL WATER AUTHORITY
SMITH MOUNTAIN LAKE WTP &
RAW WATER PUMPING STATION / INTAKE

MECHANICAL
MEMBRANE/ADMIN BUILDING
OPERATING FLOOR PLAN

DESIGNED:	MBS
DETAILED:	MAK
CHECKED:	MBS
APPROVED:	PJD
DATE:	12/09/15

0 1/2 1
IF THIS BAR DOES NOT MEASURE 1" THEN DRAWING IS NOT TO FULL SCALE

PROJECT NO.
182262

M-30-101
SHEET
OF -

D7000

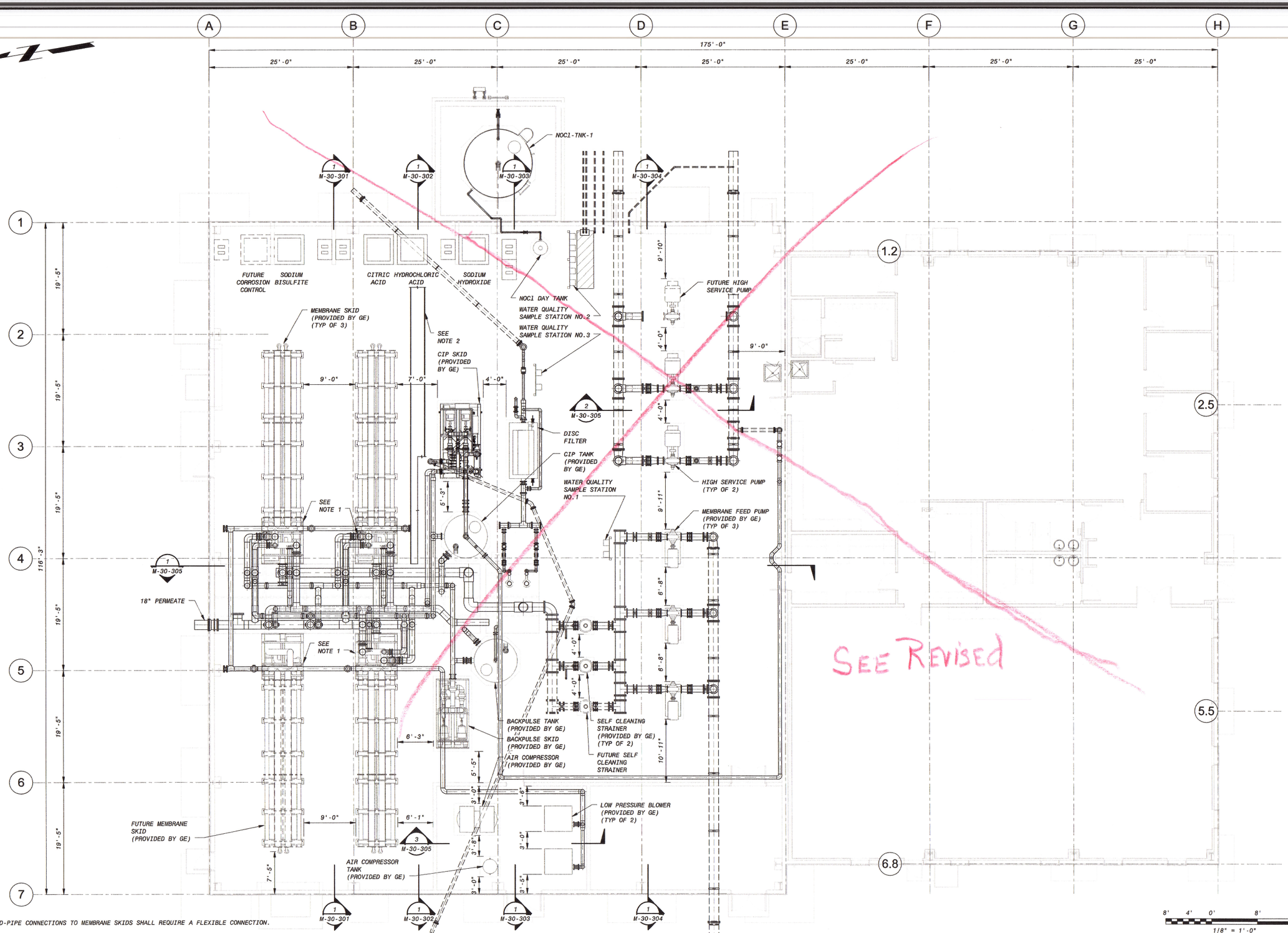

NOTES:

1. ALL HARD-PIPE CONNECTIONS TO MEMBRANE SKIDS SHALL REQUIRE A FLEXIBLE CONNECTION.
2. ROUTE CHEMICAL PIPING TO MEMBRANE SYSTEM IN LIPPED PIPE TRAY (CLEAR) TO SKIDS AND CIP/BACKPULSE SYSTEM. SLOPE TRAY TOWARDS TRENCH. PROVIDE TRAY DRAIN PIPE AT TRENCH AND ROUTE TO DRAIN BELOW TRENCH.

MEMBRANE/ADMIN BUILDING - OPERATING FLOOR PLAN

1/8" = 1'-0"

ISSUED FOR CONSTRUCTION

NO.	BY	CHK	APP
0	MAK	MBS	PJD

DATE	REVISIONS AND RECORD OF ISSUE
12/09/15	ISSUED FOR CONSTRUCTION

PW: R:\dms21275\3D-M-30-MEMBRANE-B1.rvt
SW:
SAVED: 12/9/2015 4:18:27 PM
PLOTTED:
USER:
DWG VER:
XREF1:
XREF2:
XREF3:
XREF4:

BLACK & VEATCH
Building a world of difference.
Black & Veatch Corporation
Virginia Beach, VA

BEDFORD REGIONAL WATER AUTHORITY
SMITH MOUNTAIN LAKE WTP &
RAW WATER PUMPING STATION / INTAKE

MECHANICAL
MEMBRANE/ADMIN BUILDING
OPERATING FLOOR PLAN

DESIGNED: MBS
DETAILED: MAK
CHECKED: MBS
APPROVED: PJD
DATE: 12/09/15

IF THIS BAR DOES NOT MEASURE 1" THEN DRAWING IS NOT TO FULL SCALE

PROJECT NO. 182262

M-30-101
SHEET
OF -

D7000

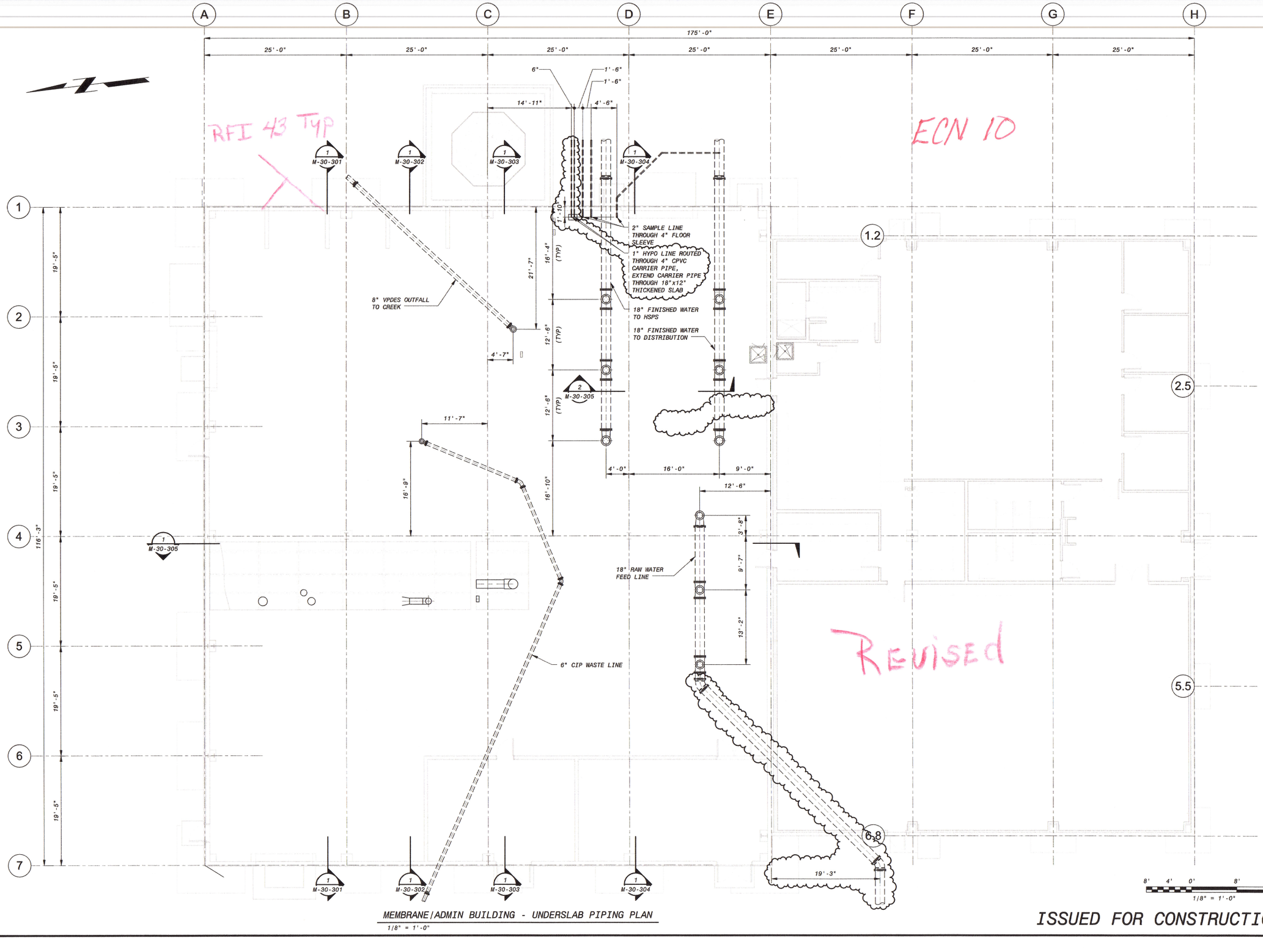

MEMBRANE/ADMIN BUILDING - UNDERSLAB PIPING PLAN

1/8" = 1'-0"

ISSUED FOR CONSTRUCTION

NO.	BY	CHK	APP
1	MAK	MBS	PJD
0	MAK	MBS	PJD

DATE	REVISIONS AND RECORD OF ISSUE
03/30/16	GENERAL REVISIONS
12/09/15	ISSUED FOR CONSTRUCTION

PW: R:\dms21275\3D-M-30-MEMBRANE-B1.rvt
SW:
SAVED: 4/4/2016 2:33:43 PM
PLOTTED:
USER:
XREF1:
XREF2:
XREF3:
XREF4:
DWG VER: 1

BLACK & VEATCH
Building a world of difference.
Black & Veatch Corporation
Virginia Beach, VA

BEDFORD REGIONAL WATER AUTHORITY
SMITH MOUNTAIN LAKE WTP &
RAW WATER PUMPING STATION / INTAKE

MECHANICAL
MEMBRANE/ADMIN BUILDING
UNDERSLAB PIPING PLAN

DESIGNED: MBS
DETAILED: MAK
CHECKED: MBS
APPROVED: PJD
DATE: 12/09/15

0 1/2 1
IF THIS BAR DOES NOT MEASURE 1" THEN DRAWING IS NOT TO FULL SCALE

PROJECT NO.
182262

M-30-102
SHEET
OF -

D7000

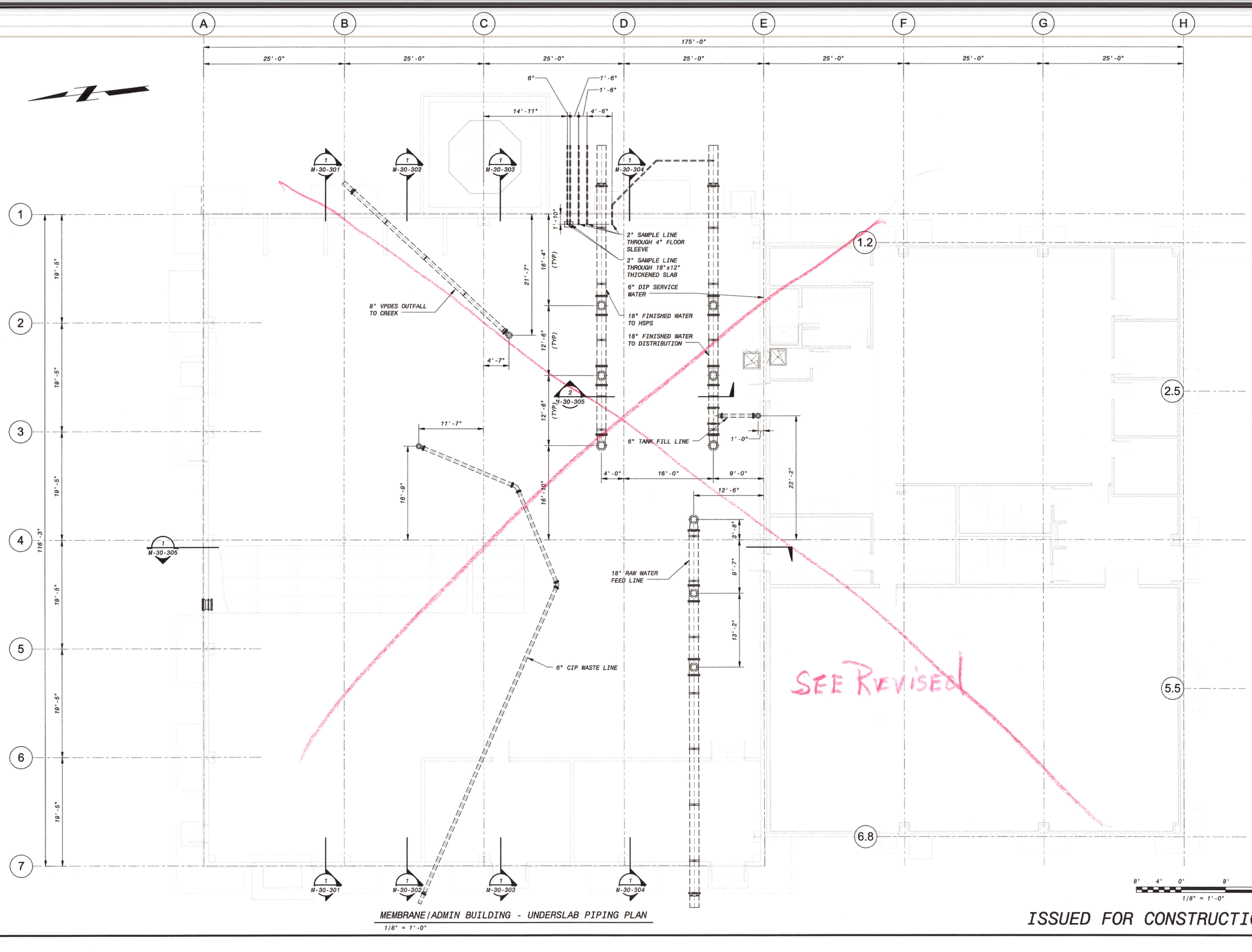

MEMBRANE/ADMIN BUILDING - UNDERSLAB PIPING PLAN

1/8" = 1'-0"

ISSUED FOR CONSTRUCTION

NO.	BY	CHK	APP
0	MAK	MBS	PJD

ISSUED FOR CONSTRUCTION

REVISIONS AND RECORD OF ISSUE

DATE: 12/09/15

PW: R:\dms21275\30-M-30-MEMBRANE-B1.rvt

SW:

SAVED: 12/9/2016 4:18:38 PM

PLOTTED:

USER:

XREF1:

XREF2:

XREF3:

XREF4:

DWG VER:

COMMONWEALTH OF VIRGINIA
PAUL J. DELPHOS
LIC. NO. 040
PROFESSIONAL ENGINEER

BLACK & VEATCH
Building a world of difference.®

Black & Veatch Corporation
Virginia Beach, VA

BEDFORD REGIONAL WATER AUTHORITY
SMITH MOUNTAIN LAKE WTP &
RAW WATER PUMPING STATION / INTAKE

MECHANICAL
MEMBRANE/ADMIN BUILDING
UNDERSLAB PIPING PLAN

DESIGNED:	MBS
DETAILED:	MAK
CHECKED:	MBS
APPROVED:	PJD
DATE:	12/09/15

0 1/2 1

IF THIS BAR DOES NOT MEASURE 1" THEN DRAWING IS NOT TO FULL SCALE

PROJECT NO.
182262

M-30-102
SHEET
OF -

D7000

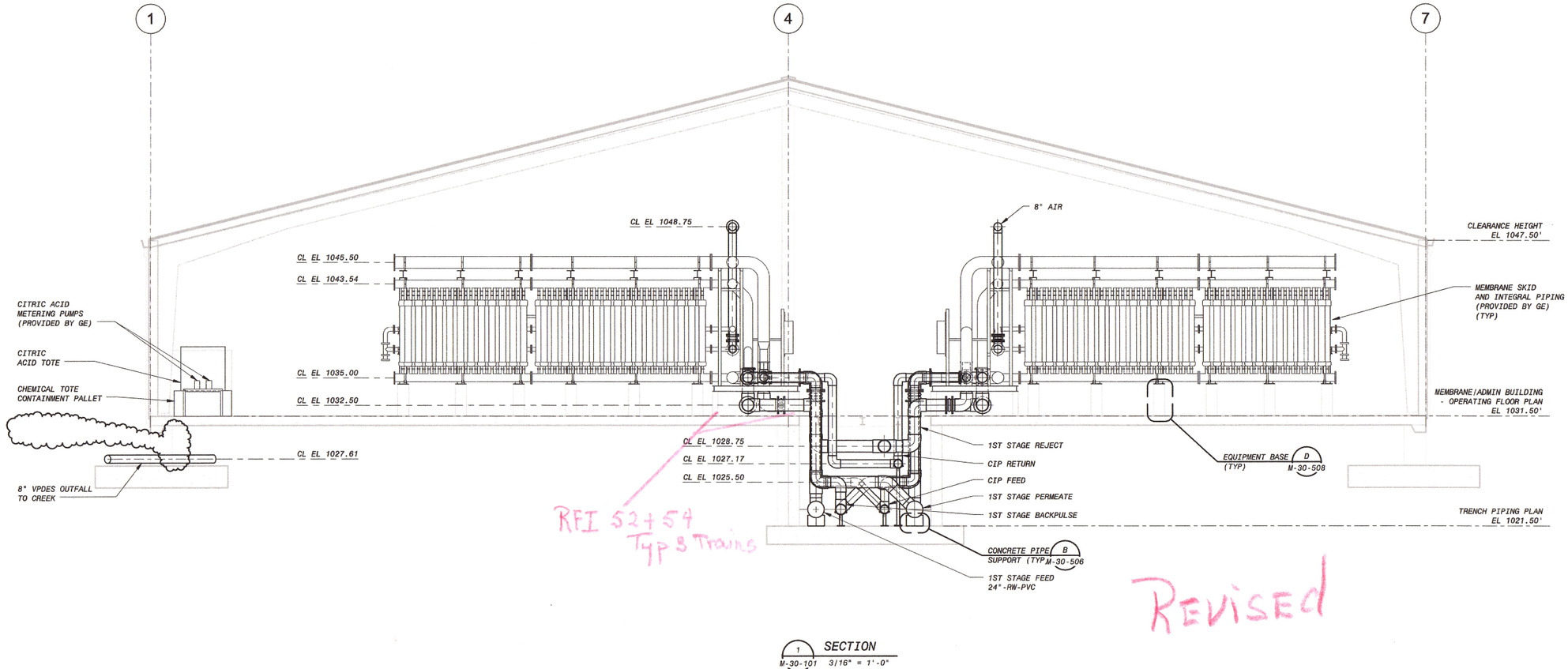

1 SECTION
M-30-101 3/16" = 1'-0"

6' 4' 2' 0' 5' 10'
3/16" = 1'-0"

ISSUED FOR CONSTRUCTION

NO.	BY	CHK	APP
1	MAK	MBS	PJD
0	MAK	MBS	PJD

DATE	REVISIONS AND RECORD OF ISSUE
03/30/16	GENERAL REVISIONS
12/09/15	ISSUED FOR CONSTRUCTION

PW: R:\dms21275\3D-M-30-MEMBRANE-B1.rvt
SW:
SAVED: 4/4/2016 2:34:02 PM
PLOTTED:
USER:
DWG VER: 1
XREF1:
XREF2:
XREF3:
XREF4:

BLACK & VEATCH
Building a world of difference.
Black & Veatch Corporation
Virginia Beach, VA

BEDFORD REGIONAL WATER AUTHORITY
SMITH MOUNTAIN LAKE WTP &
RAW WATER PUMPING STATION / INTAKE

MECHANICAL
MEMBRANE/ADMIN BUILDING
SECTIONS - SHEET 1 OF 5

DESIGNED: MBS
DETAILED: MAK
CHECKED: MBS
APPROVED: PJD
DATE: 12/09/15

0 1/2 1
IF THIS BAR DOES NOT MEASURE 1" THEN DRAWING IS NOT TO FULL SCALE

PROJECT NO.
182262

M-30-301
SHEET
OF -

D7000

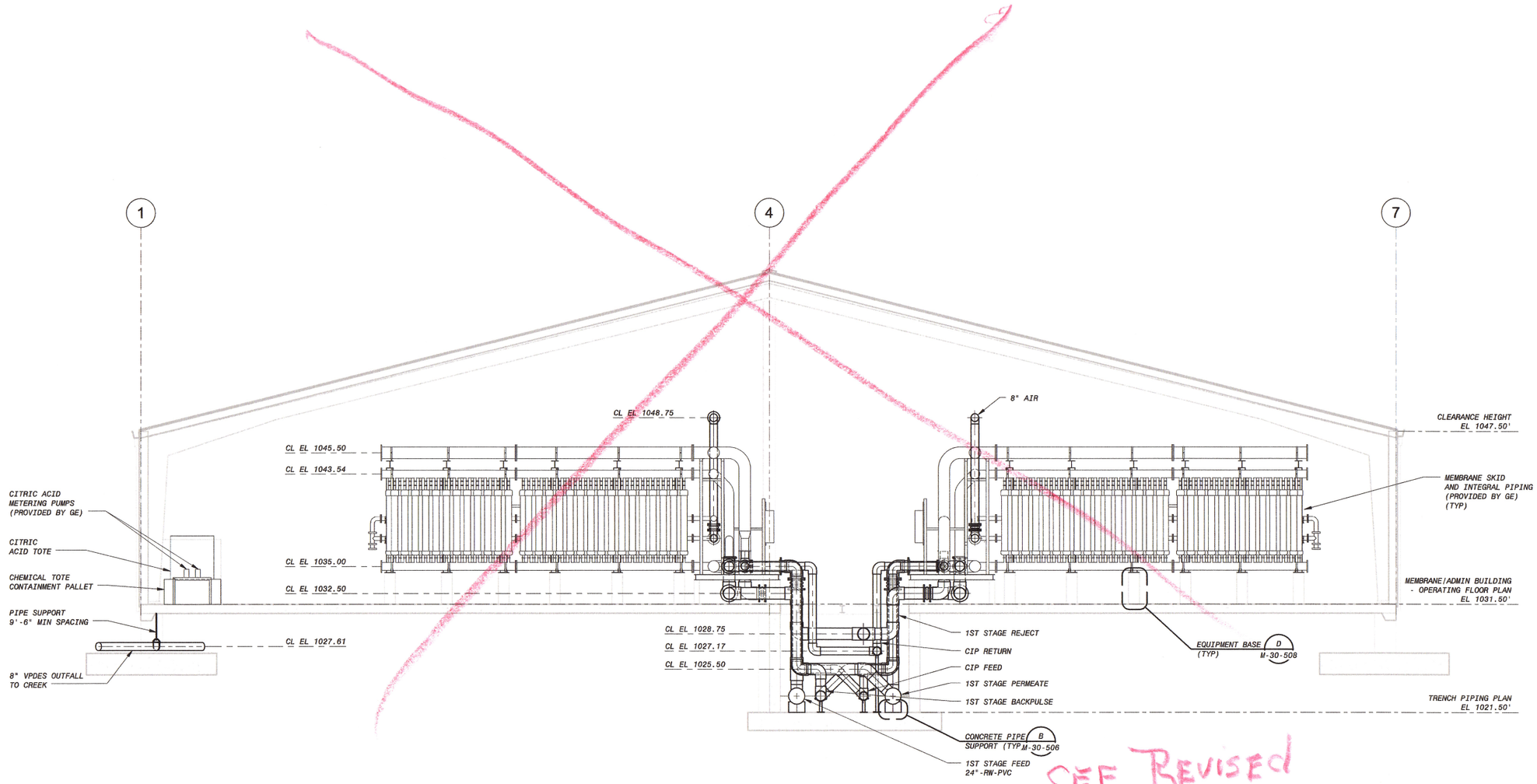

1 SECTION
M-30-101 3/16" = 1'-0"

6' 4' 2' 0' 5' 10'
3/16" = 1'-0"

ISSUED FOR CONSTRUCTION

DATE	REVISIONS AND RECORD OF ISSUE	NO.	BY	CHK	APP
12/09/15	ISSUED FOR CONSTRUCTION	0	MAK	MBS	PJD

PW: R:\dms21275\3D-M-30-MEMBRANE-B1.rvt
SW:
SAVED: 12/9/2015 4:18:55 PM
PLOTTED:
USER:
XREF1:
XREF2:
XREF3:
XREF4:
DWG VER:

COMMONWEALTH OF VIRGINIA
PAUL J. DELPHOS
Lic. No. 02688
PROFESSIONAL ENGINEER

BLACK & VEATCH
Building a world of difference.
Black & Veatch Corporation
Virginia Beach, VA

BEDFORD REGIONAL WATER AUTHORITY
SMITH MOUNTAIN LAKE WTP &
RAW WATER PUMPING STATION / INTAKE

MECHANICAL
MEMBRANE/ADMIN BUILDING
SECTIONS - SHEET 1 OF 5

DESIGNED: MBS
DETAILED: MAK
CHECKED: MBS
APPROVED: PJD
DATE: 12/09/15

0 1/2 1
IF THIS BAR DOES NOT MEASURE 1" THEN DRAWING IS NOT TO FULL SCALE

PROJECT NO.
182262

M-30-301
SHEET
OF -

D7000

ECN 10

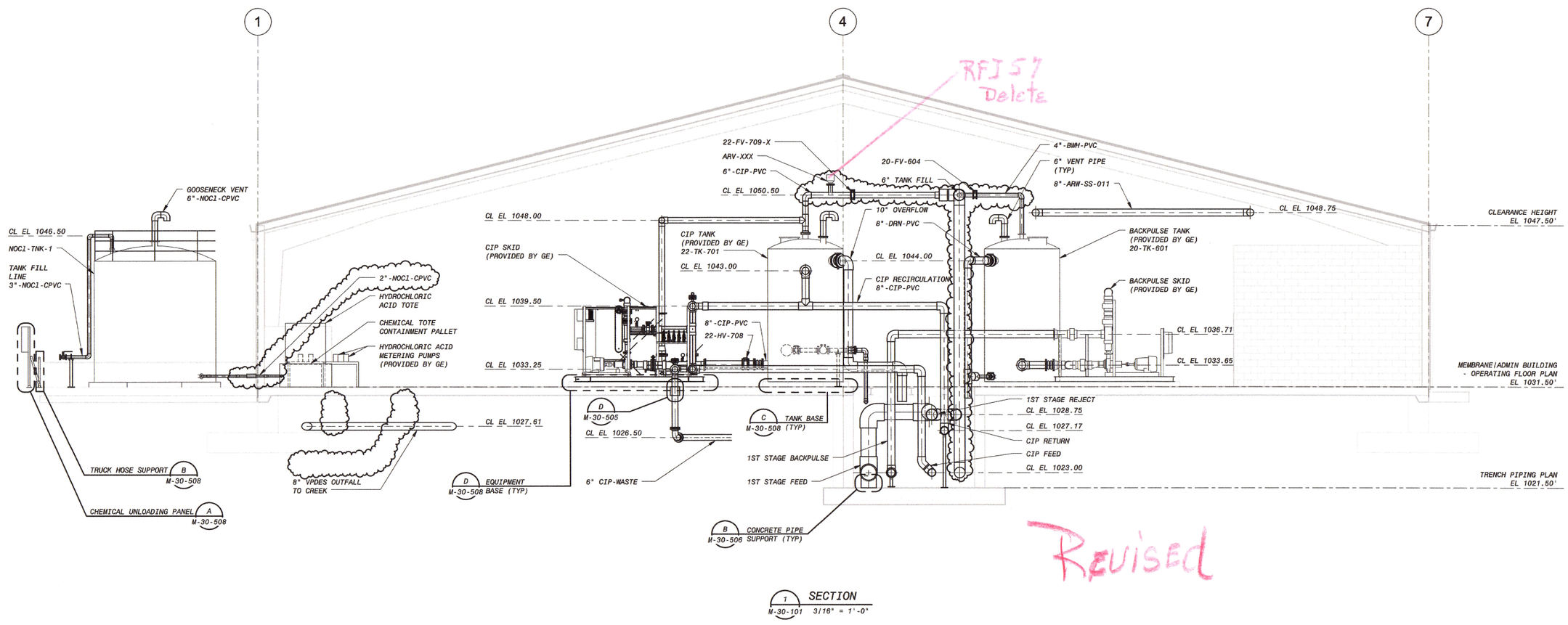

1 M-30-101 SECTION 3/16" = 1'-0"

4' 2' 0' 4' 8'
1/4" = 1'-0"

ISSUED FOR CONSTRUCTION

DATE	REVISIONS AND RECORD OF ISSUE	NO.	BY	CHK	APP
03/30/16	GENERAL REVISIONS	1	MAK	MBS	PJD
12/09/15	ISSUED FOR CONSTRUCTION	0	MAK	MBS	PJD

PW: R:\dms21275\30-M-30-MEMBRANE-B1.rvt
SW:
SAVED: 4/4/2016 2:34:14 PM
PLOTTED:
USER:
DWG VER: 1
XREF1:
XREF2:
XREF3:
XREF4:

BLACK & VEATCH
Building a world of difference.
Black & Veatch Corporation
Virginia Beach, VA

BEDFORD REGIONAL WATER AUTHORITY
SMITH MOUNTAIN LAKE WTP &
RAW WATER PUMPING STATION / INTAKE

MECHANICAL
MEMBRANE/ADMIN BUILDING
SECTIONS - SHEET 2 OF 5

DESIGNED: MBS
DETAILED: MAK
CHECKED: MBS
APPROVED: PJD
DATE: 12/09/15

0 1/2 1
IF THIS BAR DOES NOT MEASURE 1" THEN DRAWING IS NOT TO FULL SCALE

PROJECT NO. 182262

M-30-302
SHEET
OF -

D7000

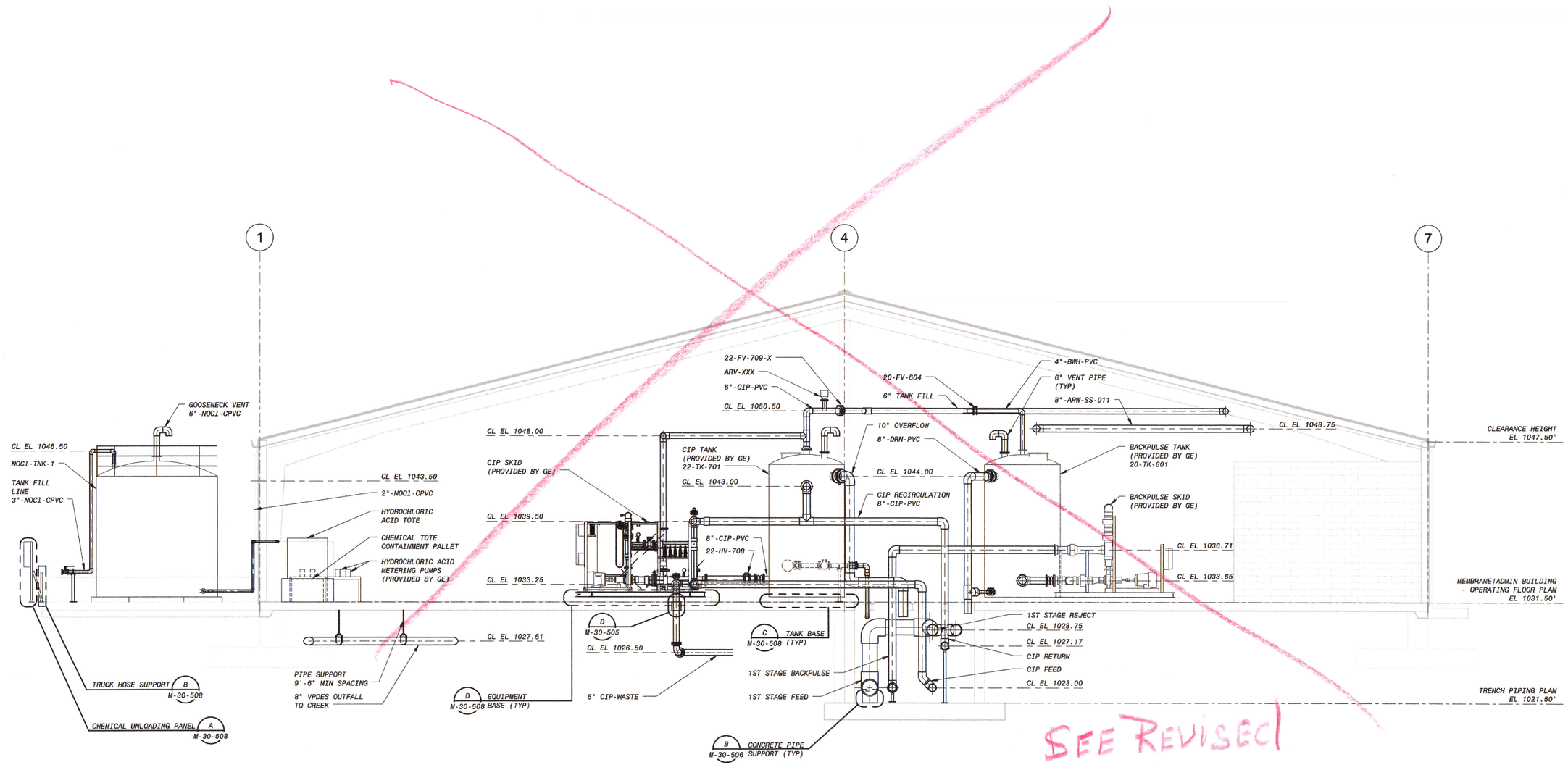

1 SECTION
M-30-101 3/16" = 1'-0"

4' 2' 0' 4' 8'
1/4" = 1'-0"

ISSUED FOR CONSTRUCTION

DATE	REVISIONS AND RECORD OF ISSUE	NO.	BY	CHK	APP
12/09/15	ISSUED FOR CONSTRUCTION	0	MAK	MBS	PJD

PW: R:\dms21275\3D-M-30-MEMBRANE-B1.rvt
SW:
SAVED: 12/9/2015 4:19:09 PM
PLOTTED:
USER:
DWG VER:
XREF1:
XREF2:
XREF3:
XREF4:

COMMONWEALTH OF VIRGINIA
PAUL J. DELPHOS
Lic. No. 026881
PROFESSIONAL ENGINEER

BLACK & VEATCH
Building a world of difference.
Black & Veatch Corporation
Virginia Beach, VA

BEDFORD REGIONAL WATER AUTHORITY
SMITH MOUNTAIN LAKE WTP &
RAW WATER PUMPING STATION / INTAKE

MECHANICAL
MEMBRANE/ADMIN BUILDING
SECTIONS - SHEET 2 OF 5

DESIGNED: MBS
DETAILED: MAK
CHECKED: MBS
APPROVED: PJD
DATE: 12/09/15

0 1/2 1
IF THIS BAR DOES NOT MEASURE 1" THEN DRAWING IS NOT TO FULL SCALE

PROJECT NO.
182262

M-30-302
SHEET
OF -

D7000

ECN 10

Revised

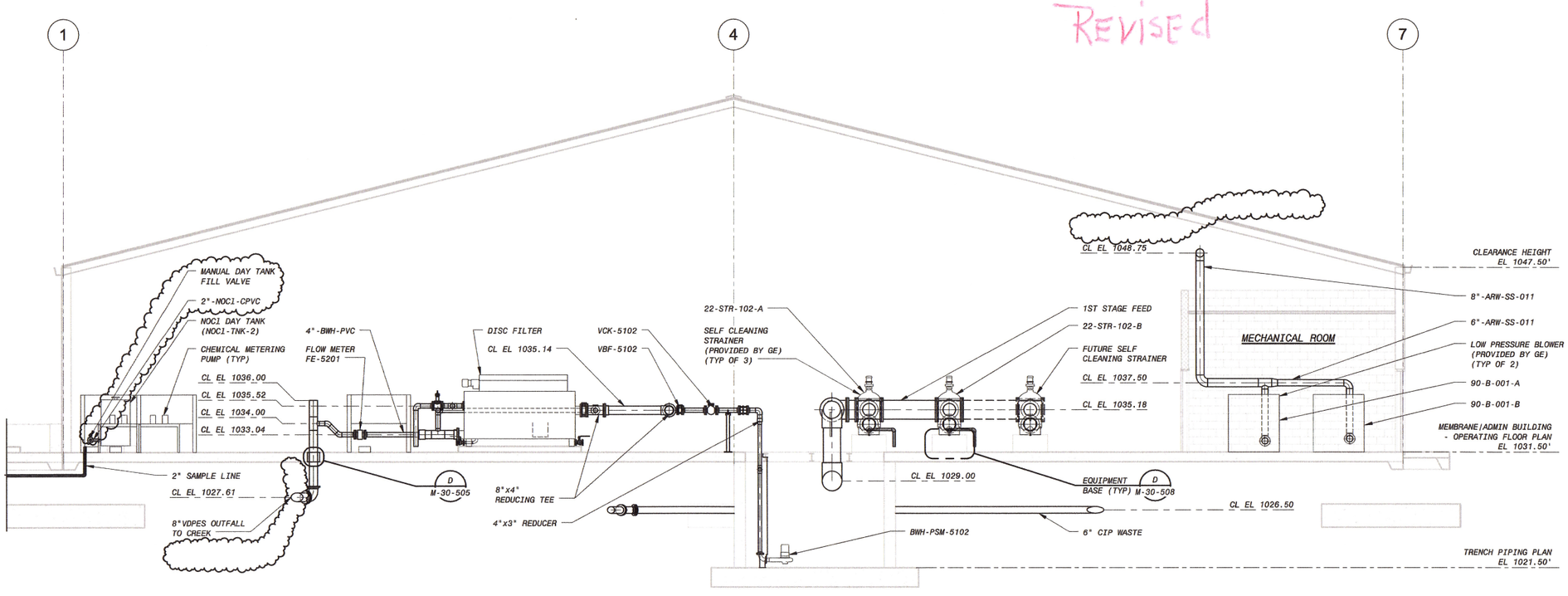

1 SECTION
M-30-101 3/16" = 1'-0"

6' 4' 2' 0' 5' 10'
3/16" = 1'-0"

ISSUED FOR CONSTRUCTION

NO.	BY	CHK	APP
1	MAK	MBS	PJD
0	MAK	MBS	PJD

GENERAL REVISIONS
ISSUED FOR CONSTRUCTION
REVISIONS AND RECORD OF ISSUE

DATE	
03/30/16	
12/09/15	

PW: R:\dbs21275\30-M-30-MEMBRANE-B1.rvt
XREF1:
SAVED: 4/4/2016 2:34:25 PM
XREF2:
PLOTTED:
XREF3:
USER:
DWG VER: 1
XREF4:

PAUL D. DELPHOS
Lic. No. 036851
COMMONWEALTH OF VIRGINIA

BLACK & VEATCH
Building a world of difference.®
Black & Veatch Corporation
Virginia Beach, VA

BEDFORD REGIONAL WATER AUTHORITY
SMITH MOUNTAIN LAKE WTP &
RAW WATER PUMPING STATION / INTAKE

MECHANICAL
MEMBRANE/ADMIN BUILDING
SECTIONS - SHEET 3 OF 5

DESIGNED: MBS
DETAILED: MAK
CHECKED: MBS
APPROVED: PJD
DATE: 12/09/15

0 1/2 1
IF THIS BAR DOES NOT MEASURE 1" THEN DRAWING IS NOT TO FULL SCALE

PROJECT NO.
182262

M-30-303
SHEET
OF -

D7000

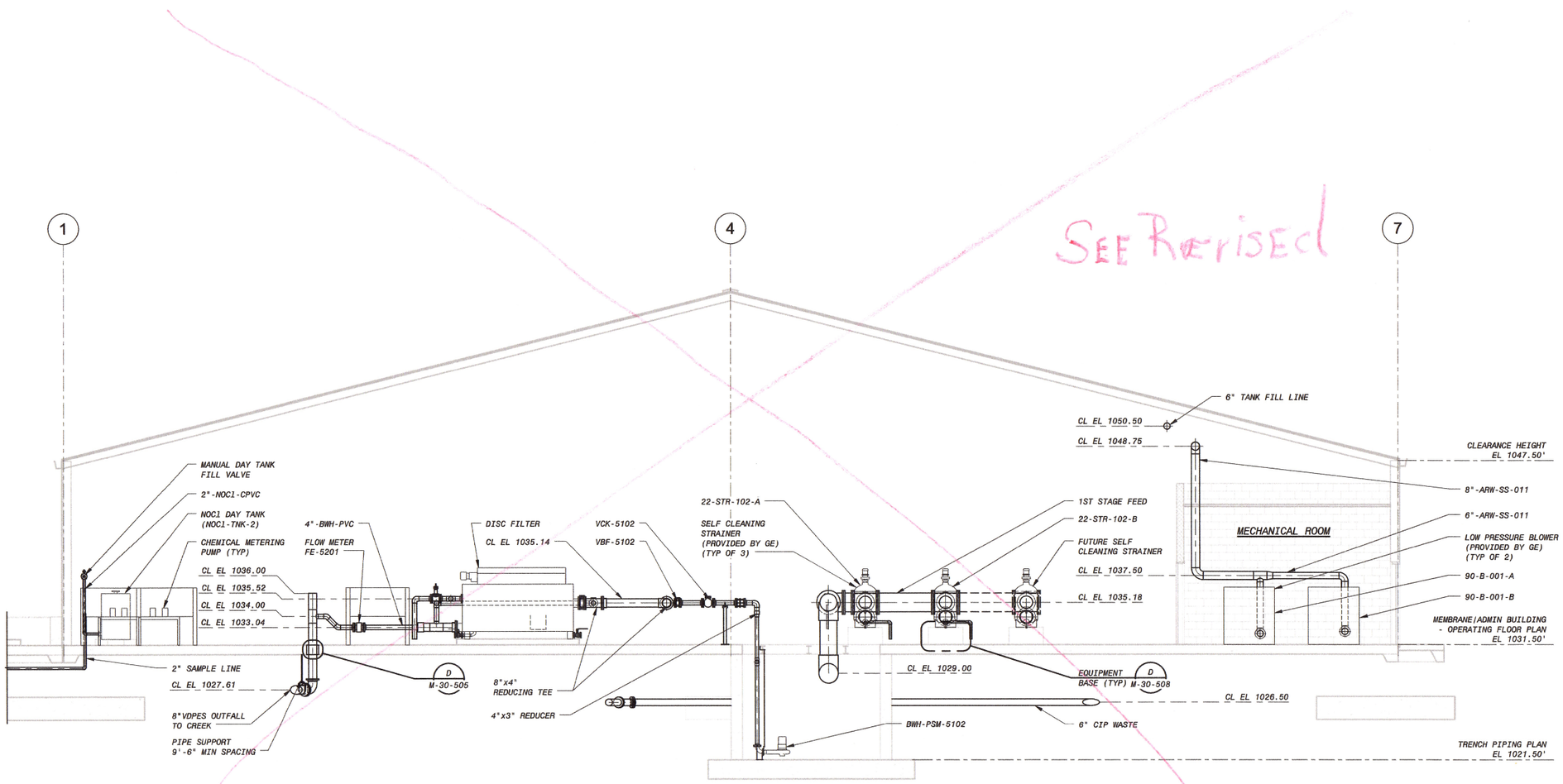

1 SECTION
M-30-101 3/16" = 1'-0"

6' 4' 2' 0' 5' 10'
3/16" = 1'-0"

ISSUED FOR CONSTRUCTION

DATE	REVISIONS AND RECORD OF ISSUE	NO.	BY	CHK	APP
12/09/15	ISSUED FOR CONSTRUCTION	0	MAK	MBS	PJD

PW: R:\dms21275\3D-M-30-MEMBRANE-B1.rvt
SW:
SAVED: 12/9/2015 4:19:16 PM
PLOTTED:
USER:
XREF1:
XREF2:
XREF3:
XREF4:
DWG VER:

COMMONWEALTH OF VIRGINIA
PAUL J. DELPHOS
Lic. No. 026561
PROFESSIONAL ENGINEER

BLACK & VEATCH
Building a world of difference.
Black & Veatch Corporation
Virginia Beach, VA

BEDFORD REGIONAL WATER AUTHORITY
SMITH MOUNTAIN LAKE WTP &
RAW WATER PUMPING STATION / INTAKE

MECHANICAL
MEMBRANE/ADMIN BUILDING
SECTIONS - SHEET 3 OF 5

DESIGNED: MBS
DETAILED: MAK
CHECKED: MBS
APPROVED: PJD
DATE: 12/09/15

0 1/2 1
IF THIS BAR DOES NOT MEASURE 1" THEN DRAWING IS NOT TO FULL SCALE

PROJECT NO.
182262

M-30-303
SHEET
OF -

D7000

ECN 10

Revised

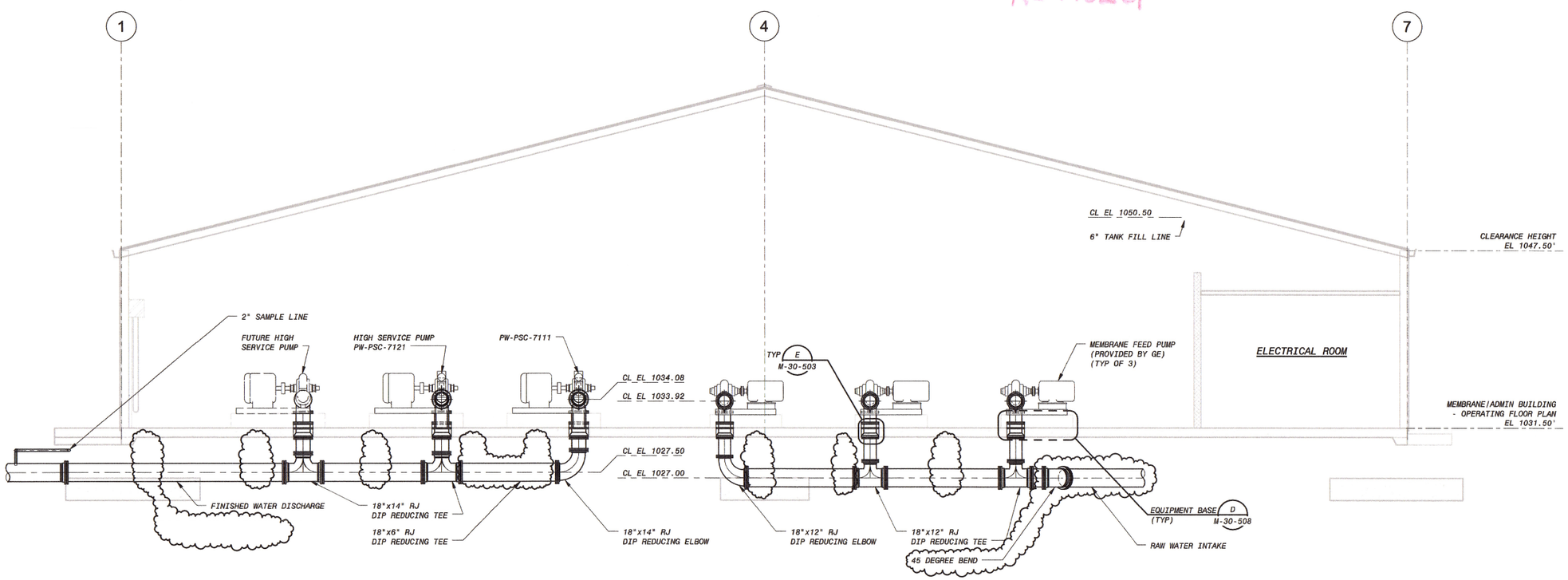

1 SECTION
M-30-101 3/16" = 1'-0"

6' 4' 2' 0' 5' 10'
3/16" = 1'-0"

ISSUED FOR CONSTRUCTION

NO.	BY	CHK	APP
1	MAK	MBS	PJD
0	MAK	MBS	PJD

DATE	REVISIONS AND RECORD OF ISSUE
03/30/16	GENERAL REVISIONS
12/09/15	ISSUED FOR CONSTRUCTION

PW: R:\dms21275\3D-M-30-MEMBRANE-B1.rvt
SW:
SAVED: 4/4/2016 2:34:35 PM
PLOTTED:
USER:
XREF1:
XREF2:
XREF3:
XREF4:
DWG VER: 1

BLACK & VEATCH
Building a world of difference.
Black & Veatch Corporation
Virginia Beach, VA

BEDFORD REGIONAL WATER AUTHORITY
SMITH MOUNTAIN LAKE WTP &
RAW WATER PUMPING STATION / INTAKE

MECHANICAL
MEMBRANE/ADMIN BUILDING
SECTIONS - SHEET 4 OF 5

DESIGNED: MBS
DETAILED: MAK
CHECKED: MBS
APPROVED: PJD
DATE: 12/09/15

0 1/2 1
IF THIS BAR DOES NOT MEASURE 1" THEN DRAWING IS NOT TO FULL SCALE

PROJECT NO.
182262

M-30-304
SHEET
OF -

D7000

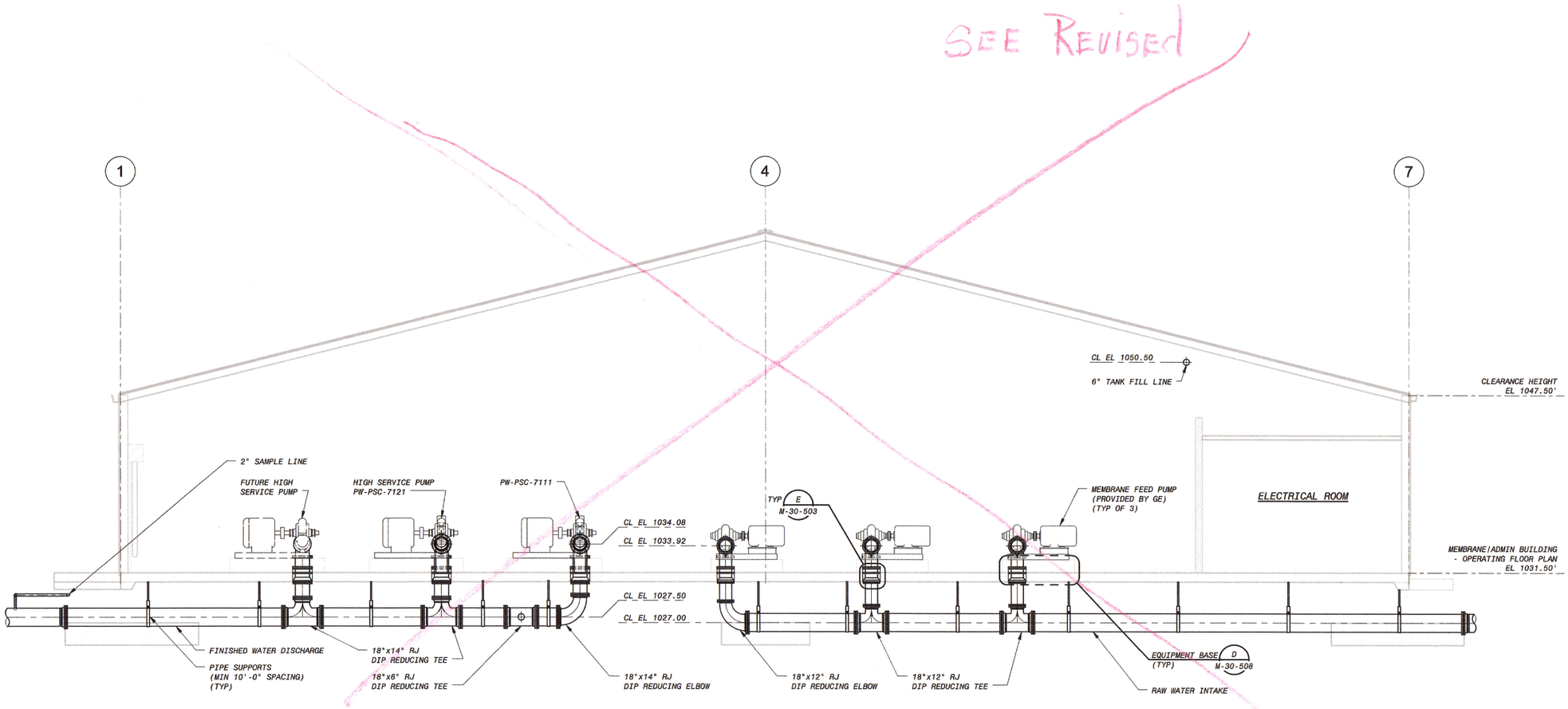

1 SECTION
M-30-101 3/16" = 1'-0"

6' 4' 2' 0' 5' 10'
3/16" = 1'-0"

ISSUED FOR CONSTRUCTION

DATE	REVISIONS AND RECORD OF ISSUE	NO.	BY	CHK	APP
12/09/15	ISSUED FOR CONSTRUCTION	0	MAK	MBS	PJD

PW: R:\dms21275\3D-M-30-MEMBRANE-B1.rvt
SW:
SAVED: 12/9/2015 4:19:25 PM
PLOTTED:
USER:
DWG VER:
XREF1:
XREF2:
XREF3:
XREF4:

COMMONWEALTH OF VIRGINIA
PAUL J. DELPHOS
Lic. No. 020881
PROFESSIONAL ENGINEER

BLACK & VEATCH
Building a world of difference.
Black & Veatch Corporation
Virginia Beach, VA

BEDFORD REGIONAL WATER AUTHORITY
SMITH MOUNTAIN LAKE WTP &
RAW WATER PUMPING STATION / INTAKE

MECHANICAL
MEMBRANE/ADMIN BUILDING
SECTIONS - SHEET 4 OF 5

DESIGNED: MBS
DETAILED: MAK
CHECKED: MBS
APPROVED: PJD
DATE: 12/09/15

0 1/2 1
IF THIS BAR DOES NOT MEASURE 1" THEN DRAWING IS NOT TO FULL SCALE

PROJECT NO.
182262

M-30-304
SHEET
OF -

D7000

ECN 10

Revised

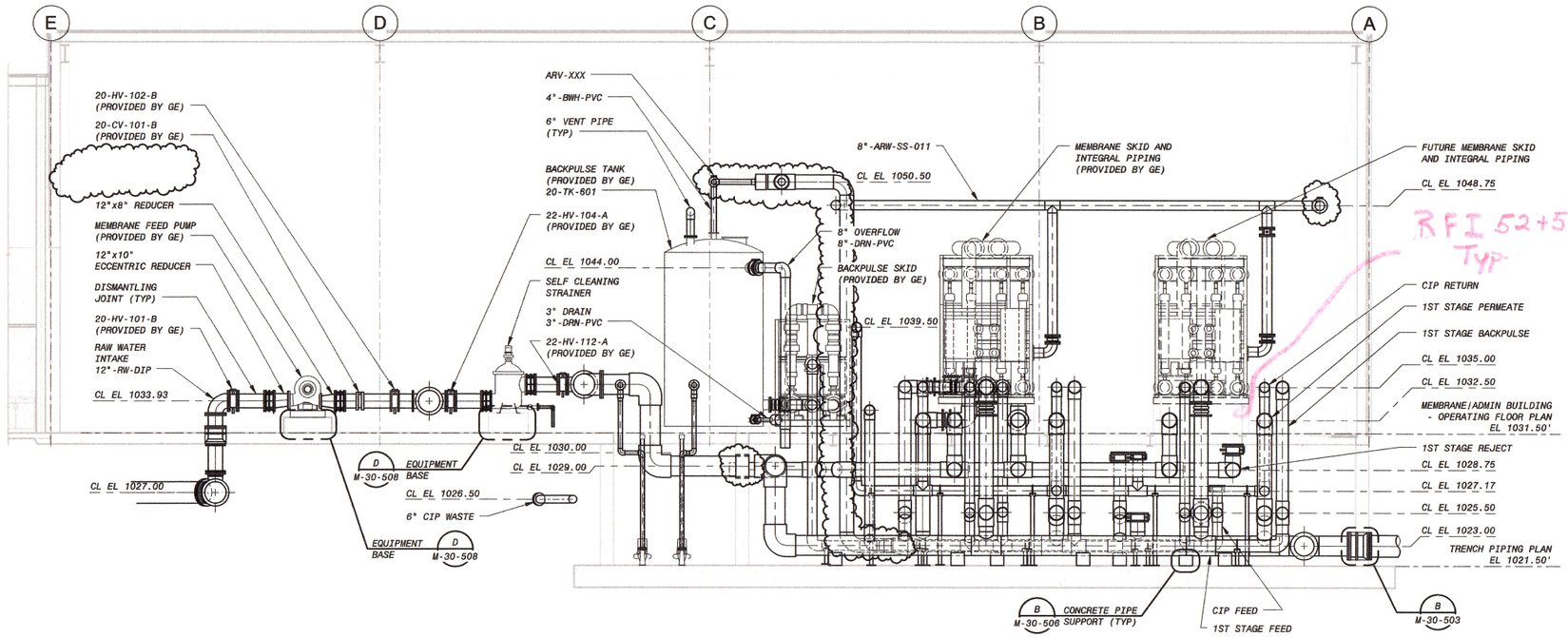

1 M-30-101 SECTION 3/16" = 1'-0"

RFI 48

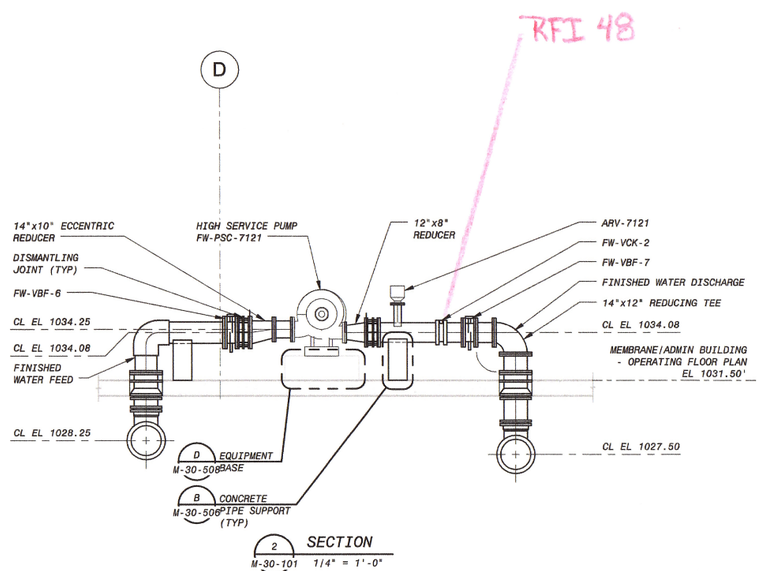

2 M-30-101 SECTION 1/4" = 1'-0"

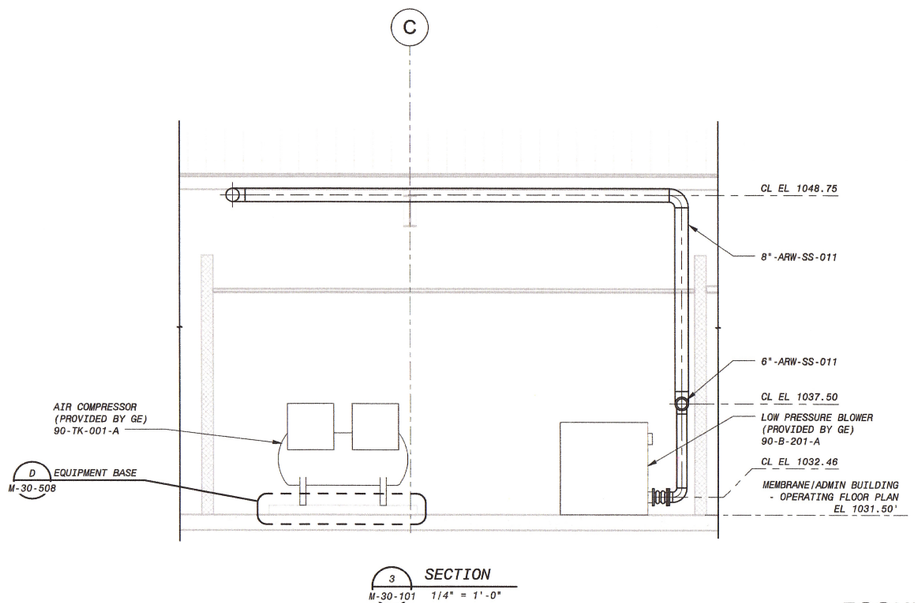

3 M-30-101 SECTION 1/4" = 1'-0"

ISSUED FOR CONSTRUCTION

NO.	BY	CHK	APP	DATE	REVISIONS AND RECORD OF ISSUE
1	MAK	MBS	PJD	03/30/16	GENERAL REVISIONS
0	MAK	MBS	PJD	12/09/15	ISSUED FOR CONSTRUCTION

PW: R:\dms21275\30-M-30-MEMBRANE-B1.rvt
SW:
SAVED: 4/4/2016 2:34:46 PM
PLOTTED:
USER:
XREF1:
XREF2:
XREF3:
XREF4:
DWG VER: 1

BLACK & VEATCH
Building a world of difference.
Black & Veatch Corporation
Virginia Beach, VA

BEDFORD REGIONAL WATER AUTHORITY
SMITH MOUNTAIN LAKE WTP &
RAW WATER PUMPING STATION / INTAKE

MECHANICAL
MEMBRANE/ADMIN BUILDING
SECTIONS - SHEET 5 OF 5

DESIGNED:	MBS
DETAILED:	MAK
CHECKED:	MBS
APPROVED:	PJD
DATE:	12/09/15

0 1/2 1
IF THIS BAR DOES NOT MEASURE 1" THEN DRAWING IS NOT TO FULL SCALE

4' 2' 0' 4' 8'
1/4" = 1'-0"

6' 4' 2' 0' 5' 10'
3/16" = 1'-0"

PROJECT NO.
182262

M-30-305
SHEET
OF -

D7000

SEE REVISED

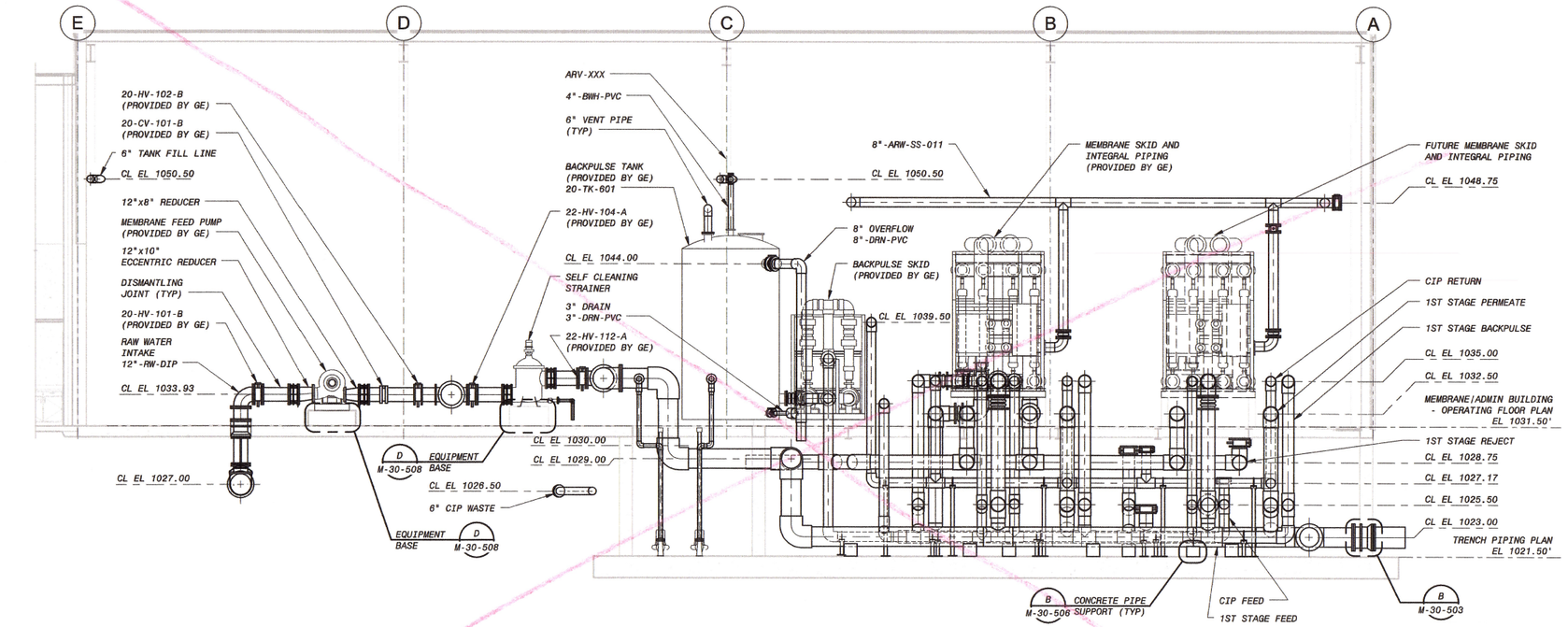

1 M-30-101 SECTION 3/16" = 1'-0"

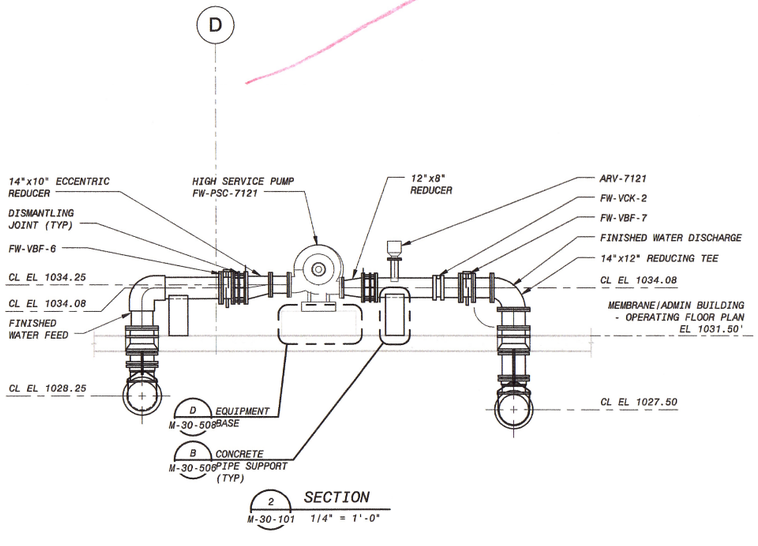

2 M-30-101 SECTION 1/4" = 1'-0"

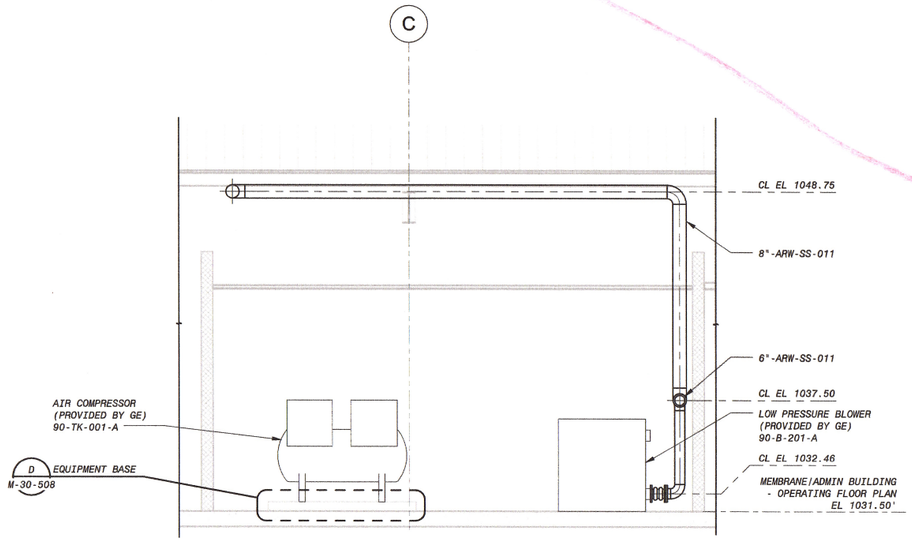

3 M-30-101 SECTION 1/4" = 1'-0"

4' 2' 0' 4' 8'
1/4" = 1'-0"

6' 4' 2' 0' 5' 10'
3/16" = 1'-0"

ISSUED FOR CONSTRUCTION

NO.	BY	CHK	APP	DATE	REVISIONS AND RECORD OF ISSUE
0	MAK	MBS	PJD	12/09/15	ISSUED FOR CONSTRUCTION

FW: R:\dms21275\3D-M-30-MEMBRANE-B1.rvt
SAVED: 12/9/2015 4:19:39 PM
PLOTTED:
USER:
XREF1:
XREF2:
XREF3:
XREF4:
DWG VER:

PAUL J. DELPHOS LIC. NO. 0402 COMMONWEALTH OF VIRGINIA PROFESSIONAL ENGINEER

BLACK & VEATCH Building a world of difference®
Black & Veatch Corporation Virginia Beach, VA

BEDFORD REGIONAL WATER AUTHORITY
SMITH MOUNTAIN LAKE WTP &
RAW WATER PUMPING STATION / INTAKE

MECHANICAL
MEMBRANE/ADMIN BUILDING
SECTIONS - SHEET 5 OF 5

DESIGNED:	MBS
DETAILED:	MAK
CHECKED:	MBS
APPROVED:	PJD
DATE:	12/09/15

0 1/2 1
IF THIS BAR DOES NOT MEASURE 1" THEN DRAWING IS NOT TO FULL SCALE

PROJECT NO. 182262

M-30-305
SHEET
OF -

D7000

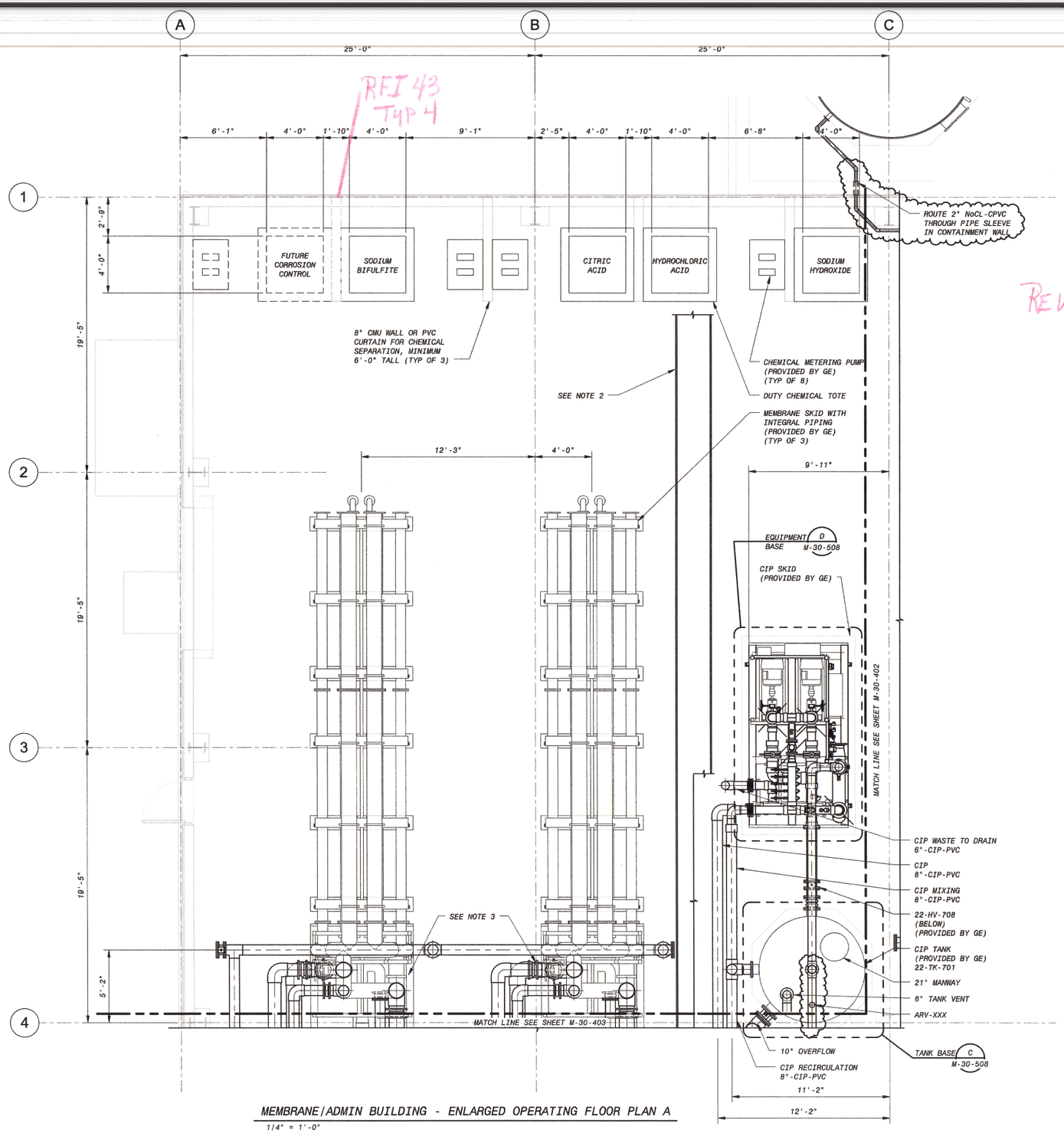

MEMBRANE/ADMIN BUILDING - ENLARGED OPERATING FLOOR PLAN A

1/4" = 1'-0"

NOTES:

1. ALL NOCl TANK AND PUMP VENTS TO BE ROUTED TO EXTERIOR OF BUILDING.
2. ROUTE CHEMICAL FEED PIPING TO MEMBRANE SYSTEM IN 30" WIDE LIPPED PIPE TRAY (CLEAR) 8'-0" ABOVE FINISHED FLOOR TO SKIDS AND CIP/BACKPULSE SYSTEM. SLOPE TRAY TOWARDS TRENCH. PROVIDE TRAY DRAIN PIPE AT TRENCH AND ROUTE TO DRAIN BELOW TRENCH.
3. ALL HARD-PIPE CONNECTIONS TO MEMBRANE SKIDS SHALL REQUIRE A FLEXIBLE CONNECTION.

4' 2' 0' 4' 8'

1/4" = 1'-0"

ISSUED FOR CONSTRUCTION

NO.	BY	CHK	APP
1	MAK	MBS	PJD
0	MAK	MBS	PJD

DATE	REVISIONS AND RECORD OF ISSUE
03/30/16	GENERAL REVISIONS
12/09/15	ISSUED FOR CONSTRUCTION

PW: R:\dms21275\3D-M-30-MEMBRANE-B1.rvt
SW:
SAVED: 4/4/2016 2:35:01 PM
PLOTTED:
USER:
XREF1:
XREF2:
XREF3:
XREF4:
DWG VER: 1

COMMONWEALTH OF VIRGINIA
PAUL J. DELPHOS
Lic. No. 036881
PROFESSIONAL ENGINEER
3-30-16

BLACK & VEATCH
Building a world of difference.
Black & Veatch Corporation
Virginia Beach, VA

BEDFORD REGIONAL WATER AUTHORITY
SMITH MOUNTAIN LAKE WTP &
RAW WATER PUMPING STATION / INTAKE

MECHANICAL
MEMBRANE/ADMIN BUILDING
ENLARGED OPERATING FLOOR PLAN A

DESIGNED: MBS
DETAILED: MAK
CHECKED: MBS
APPROVED: PJD
DATE: 12/09/15

0 1/2 1
IF THIS BAR DOES NOT MEASURE 1" THEN DRAWING IS NOT TO FULL SCALE

PROJECT NO.
182262

M-30-401
SHEET
OF -

D7000

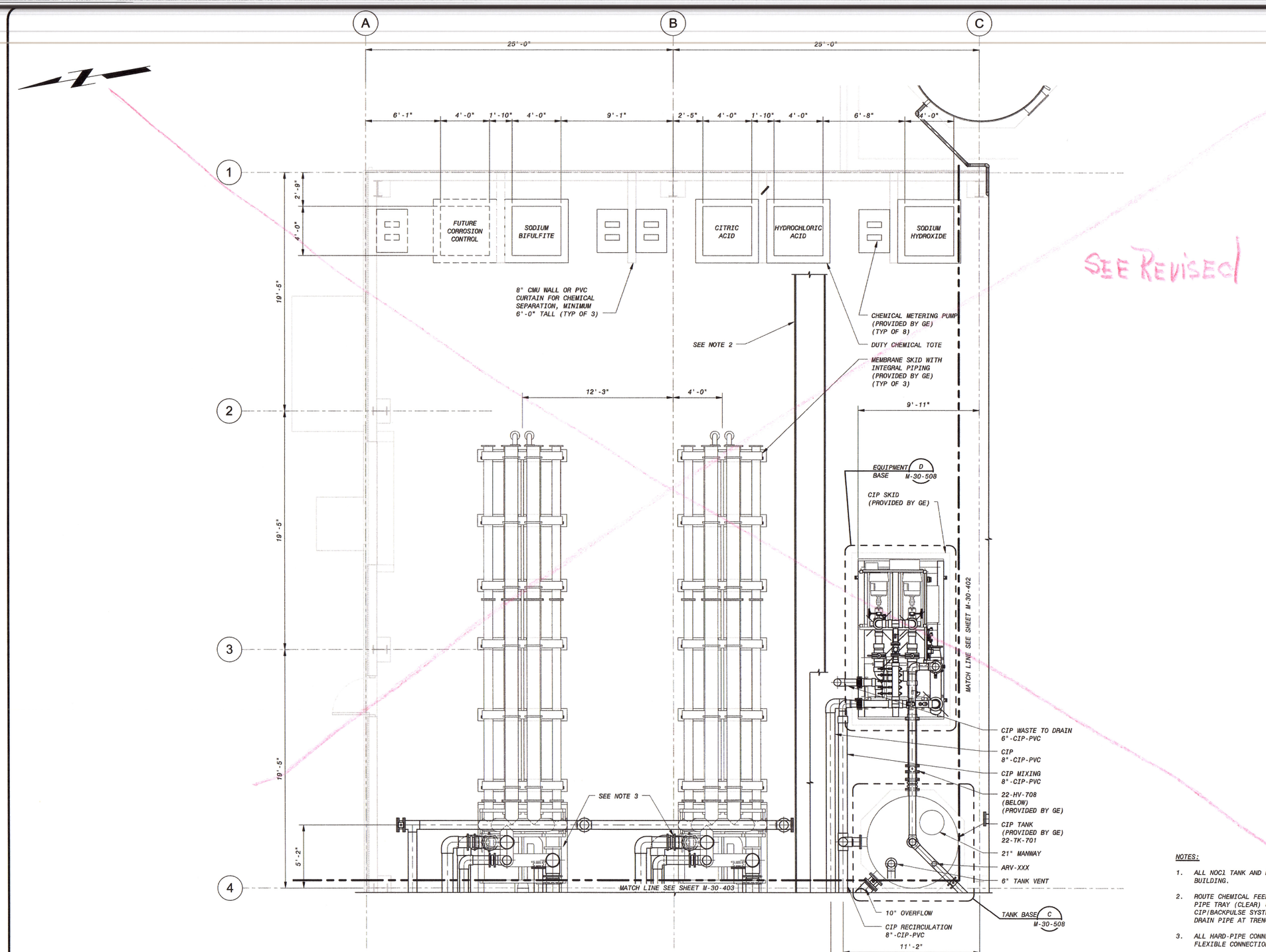

MEMBRANE/ADMIN BUILDING - ENLARGED OPERATING FLOOR PLAN A

1/4" = 1'-0"

NOTES:

1. ALL NOCl TANK AND PUMP VENTS TO BE ROUTED TO EXTERIOR OF BUILDING.
2. ROUTE CHEMICAL FEED PIPING TO MEMBRANE SYSTEM IN 30" WIDE LIPPED PIPE TRAY (CLEAR) 8'-0" ABOVE FINISHED FLOOR TO SKIDS AND CIP/BACKPULSE SYSTEM. SLOPE TRAY TOWARDS TRENCH. PROVIDE TRAY DRAIN PIPE AT TRENCH AND ROUTE TO DRAIN BELOW TRENCH.
3. ALL HARD-PIPE CONNECTIONS TO MEMBRANE SKIDS SHALL REQUIRE A FLEXIBLE CONNECTION.

4' 2' 0' 4' 8'

1/4" = 1'-0"

ISSUED FOR CONSTRUCTION

NO.	BY	CHK	APP
0	MAK	MBS	PJD

ISSUED FOR CONSTRUCTION

REVISIONS AND RECORD OF ISSUE

12/09/15

DATE

PW: R:\dms21275\3D-M-30-MEMBRANE-B1.rvt

SW:

SAVED: 12/9/2015 4:19:54 PM

PLOTTED:

USER:

DWG VER:

XREF1:

XREF2:

XREF3:

XREF4:

COMMONWEALTH OF VIRGINIA
PAUL J. DELPHOS
Lic. No. 02661
PROFESSIONAL ENGINEER

BLACK & VEATCH
Building a world of difference.
Black & Veatch Corporation
Virginia Beach, VA

BEDFORD REGIONAL WATER AUTHORITY
SMITH MOUNTAIN LAKE WTP &
RAW WATER PUMPING STATION / INTAKE

MECHANICAL
MEMBRANE/ADMIN BUILDING
ENLARGED OPERATING FLOOR PLAN A

DESIGNED: MBS
DETAILED: MAK
CHECKED: MBS
APPROVED: PJD
DATE: 12/09/15

0 1/2 1

IF THIS BAR DOES NOT MEASURE 1" THEN DRAWING IS NOT TO FULL SCALE

PROJECT NO.
182262

M-30-401
SHEET
OF -

D7000

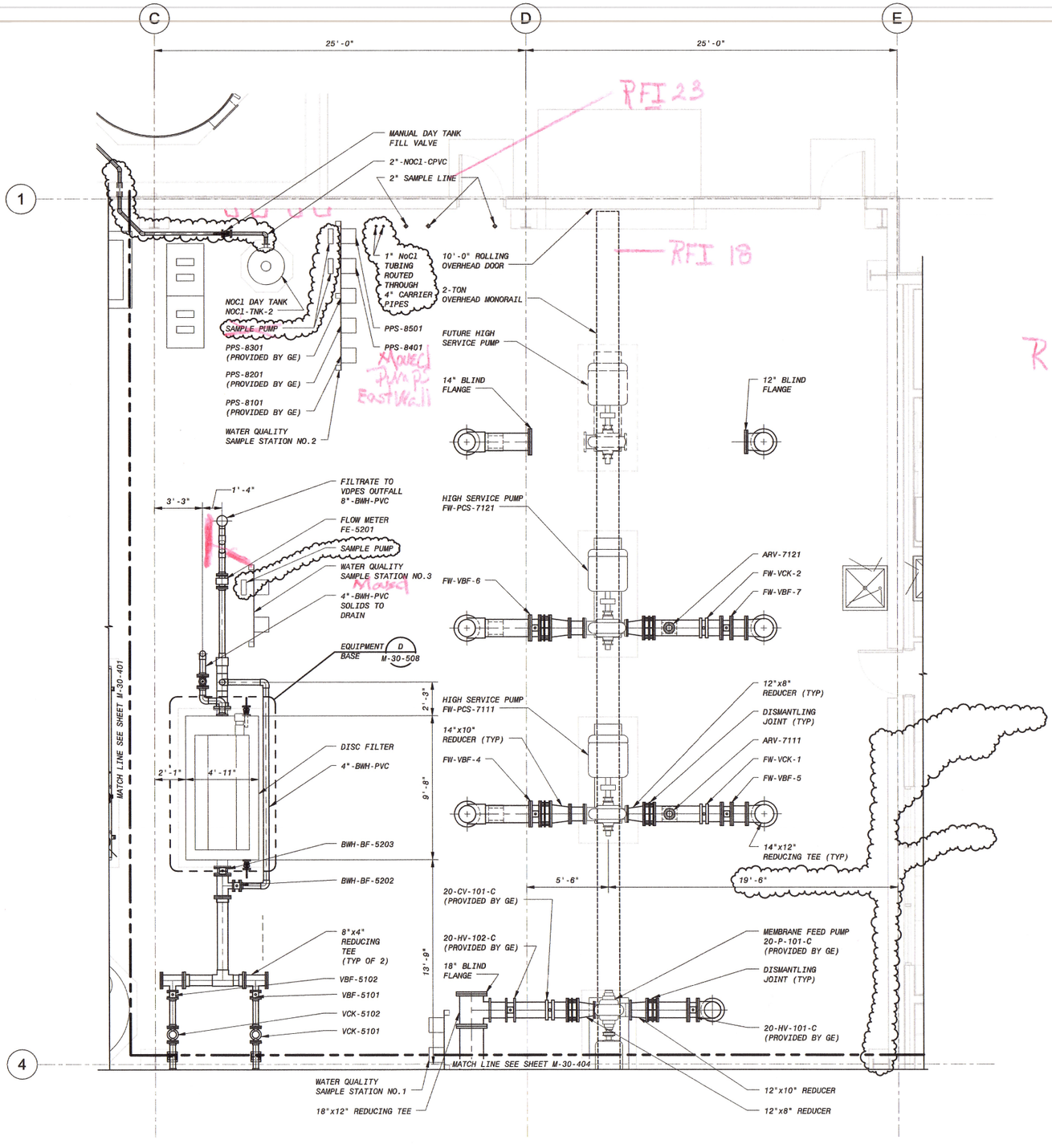

MEMBRANE/ADMIN BUILDING - ENLARGED OPERATING FLOOR PLAN B

1/4" = 1'-0"

NOTE:

1. ROUTE IN 12" PIPE TO HYPOCHLORIDE CONTAINMENT AREA.

4' 2' 0' 4' 8'

1/4" = 1'-0"

ISSUED FOR CONSTRUCTION

NO.	BY	CHK	APP
1	MAK	MBS	PJD
0	MAK	MBS	PJD

DATE	REVISIONS AND RECORD OF ISSUE
03/30/16	GENERAL REVISIONS
12/09/15	ISSUED FOR CONSTRUCTION

PW: R:\dms21275\3D-M-30-MEMBRANE-B1.rvt
SW:
SAVED: 4/4/2016 2:35:10 PM
PLOTTED:
USER:
DWG VER: 1
XREF1:
XREF2:
XREF3:
XREF4:

BLACK & VEATCH
Building a world of difference.
Black & Veatch Corporation
Virginia Beach, VA

BEDFORD REGIONAL WATER AUTHORITY
SMITH MOUNTAIN LAKE WTP &
RAW WATER PUMPING STATION / INTAKE

MECHANICAL
MEMBRANE/ADMIN BUILDING
ENLARGED OPERATING FLOOR PLAN B

DESIGNED: MBS
DETAILED: MAK
CHECKED: MBS
APPROVED: PJD
DATE: 12/09/15

0 1/2 1
IF THIS BAR DOES NOT MEASURE 1" THEN DRAWING IS NOT TO FULL SCALE

PROJECT NO.
182262

M-30-402
SHEET
OF -

D7000

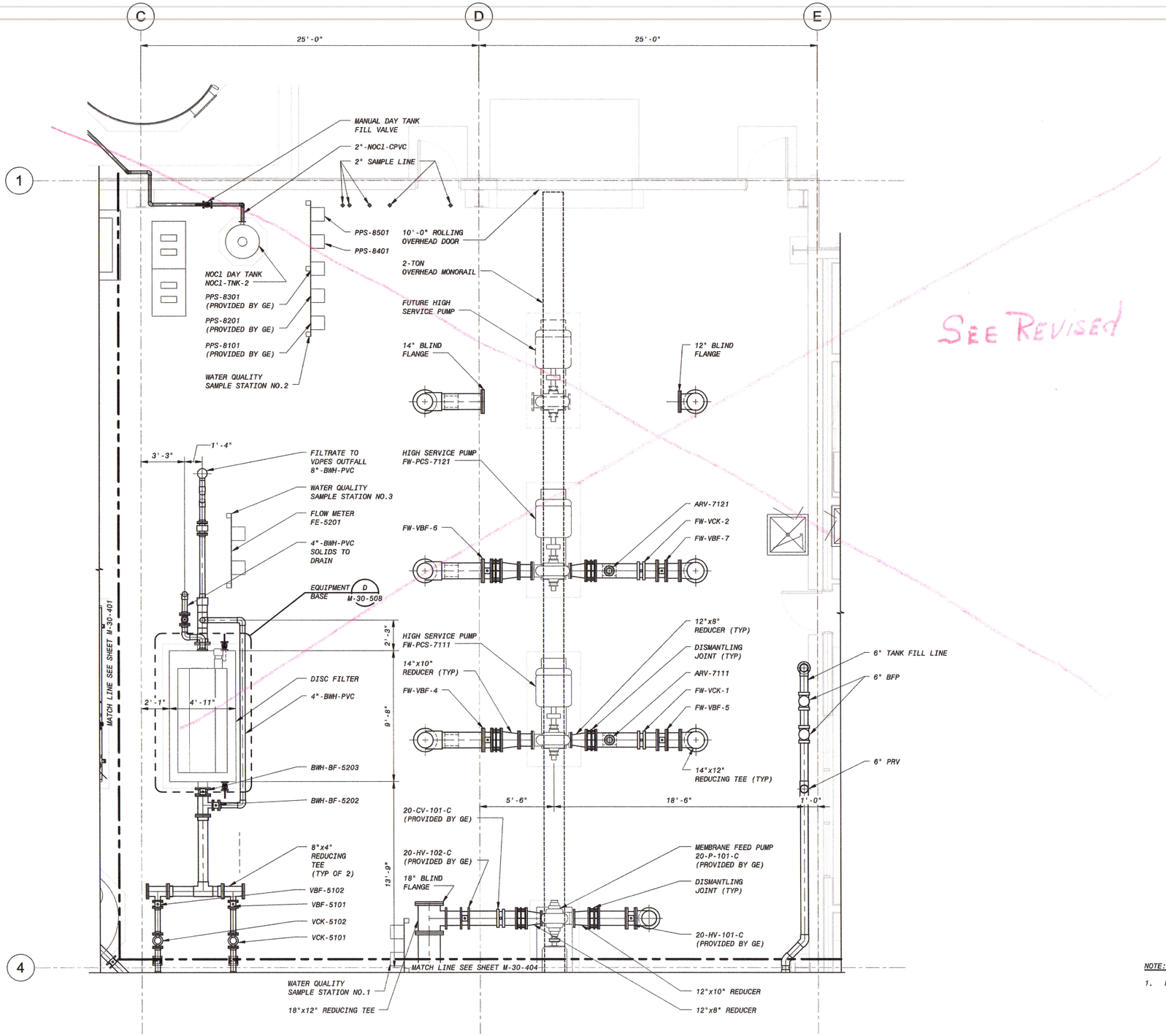

MEMBRANE/ADMIN BUILDING - ENLARGED OPERATING FLOOR PLAN B

1/4" = 1'-0"

NOTE:

1. ROUTE IN 12" PIPE TO HYPOCHLORIDE CONTAINMENT AREA.

4' 2' 0' 4' 8'

1/4" = 1'-0"

ISSUED FOR CONSTRUCTION

NO.	BY	CHK	APP
0	MAK	MBS	PJD

12/09/15 ISSUED FOR CONSTRUCTION

DATE REVISIONS AND RECORD OF ISSUE

PW: R:\dms21275\30-M-30-MEMBRANE-B1.rvt

SW:

SAVED: 12/9/2015 4:20:04 PM

PLOTTED:

USER:

DWG VER:

XREF1:

XREF2:

XREF3:

XREF4:

COMMONWEALTH OF VIRGINIA
PAUL J. DELPHOS
Lic. No. 02856
PROFESSIONAL ENGINEER

BLACK & VEATCH
Building a world of difference.
Black & Veatch Corporation
Virginia Beach, VA

BEDFORD REGIONAL WATER AUTHORITY
SMITH MOUNTAIN LAKE WTP &
RAW WATER PUMPING STATION / INTAKE

MECHANICAL
MEMBRANE/ADMIN BUILDING
ENLARGED OPERATING FLOOR PLAN B

DESIGNED: MBS
DETAILED: MAK
CHECKED: MBS
APPROVED: PJD
DATE: 12/09/15

0 1/2 1
IF THIS BAR DOES NOT MEASURE 1" THEN DRAWING IS NOT TO FULL SCALE

PROJECT NO.
182262

M-30-402
SHEET
OF -

D7000

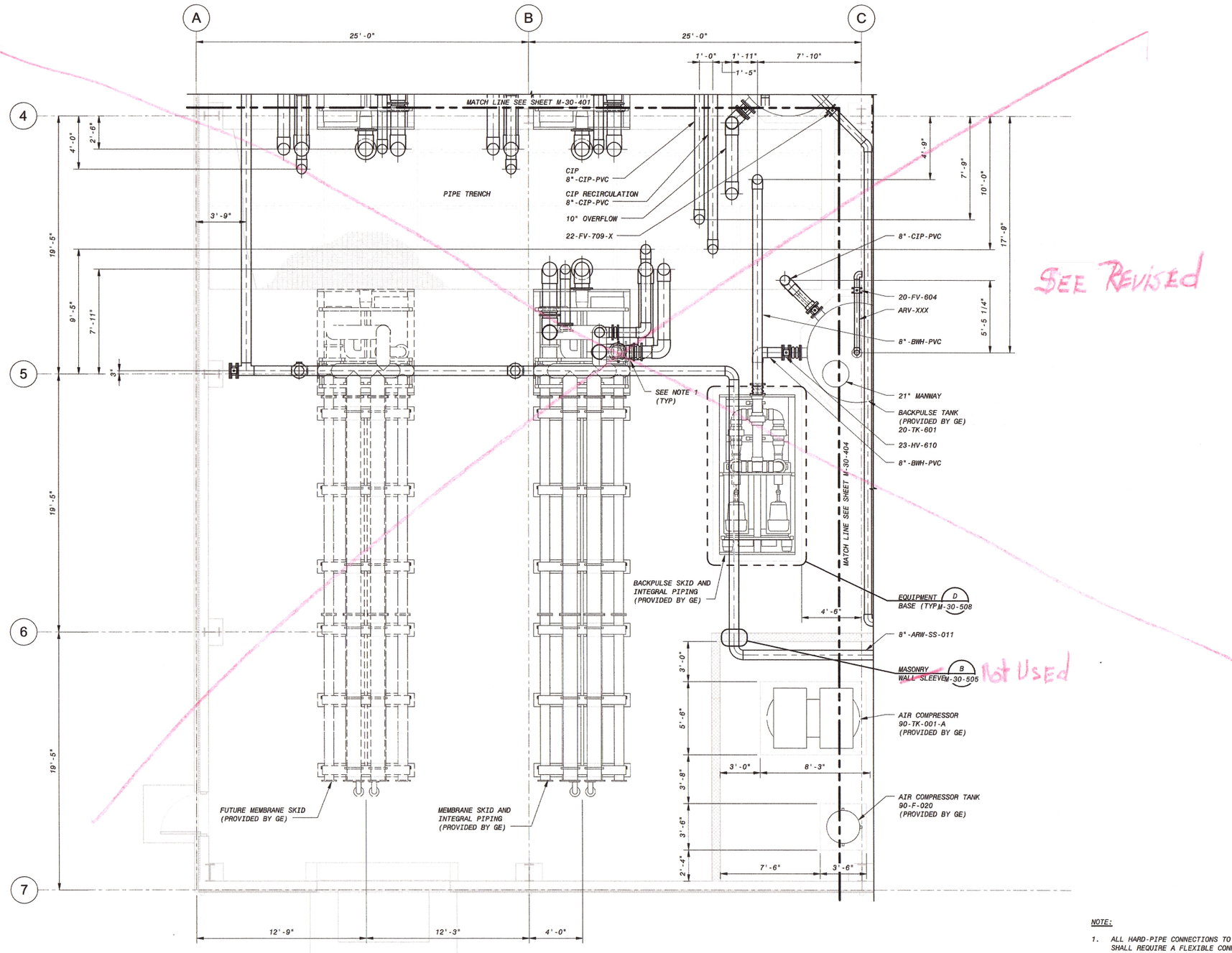

MEMBRANE/ADMIN BUILDING - ENLARGED OPERATING FLOOR PLAN C

1/4" = 1'-0"

See Revised

Not Used

NOTE:

1. ALL HARD-PIPE CONNECTIONS TO MEMBRANE SKIDS AND OTHER G.E. SKIDS SHALL REQUIRE A FLEXIBLE CONNECTION.

4' 2' 0' 4' 8'

1/4" = 1'-0"

ISSUED FOR CONSTRUCTION

NO.	BY	CHK	APP	DATE	REVISIONS AND RECORD OF ISSUE
0	MAK	MBS	PJD	12/09/15	ISSUED FOR CONSTRUCTION

PW: R:\Dms21275\3D-M-30-MEMBRANE-B1.rvt
SW:
SAVED: 12/9/2015 4:20:16 PM
PLOTTED:
USER:
XREF1:
XREF2:
XREF3:
XREF4:
DWG VER:

BLACK & VEATCH
Building a world of difference.®
Black & Veatch Corporation
Virginia Beach, VA

BEDFORD REGIONAL WATER AUTHORITY
SMITH MOUNTAIN LAKE WTP &
RAW WATER PUMPING STATION / INTAKE

MECHANICAL
MEMBRANE/ADMIN BUILDING
ENLARGED OPERATING FLOOR PLAN C

DESIGNED: MBS
DETAILED: MAK
CHECKED: MBS
APPROVED: PJD
DATE: 12/09/15

0 1/2 1
IF THIS BAR DOES NOT MEASURE 1" THEN DRAWING IS NOT TO FULL SCALE

PROJECT NO.
182262

M-30-403
SHEET
OF -

D7000

ECN 10

Revised

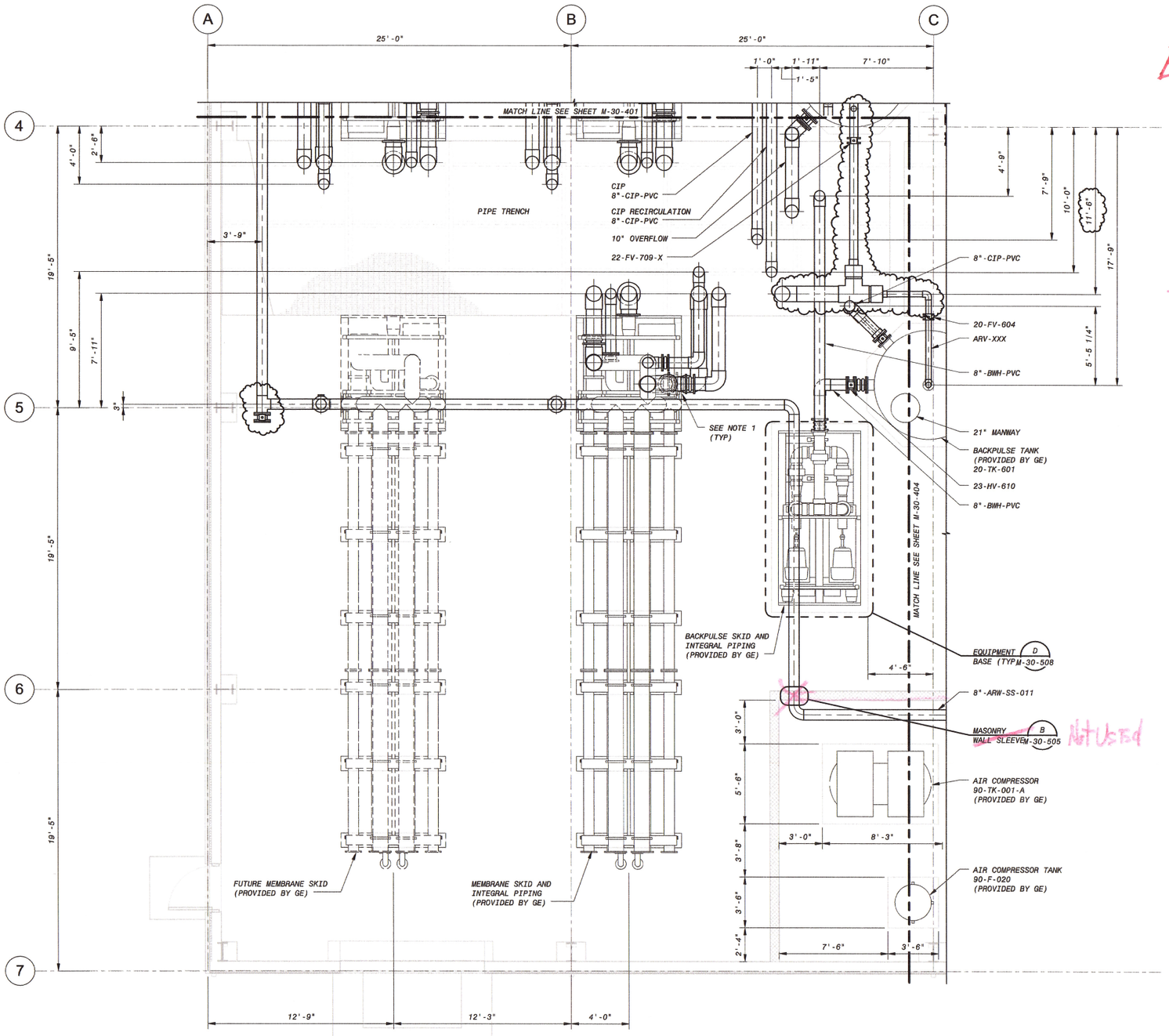

MEMBRANE/ADMIN BUILDING - ENLARGED OPERATING FLOOR PLAN C

1/4" = 1'-0"

NOTE:

1. ALL HARD-PIPE CONNECTIONS TO MEMBRANE SKIDS AND OTHER G.E. SKIDS SHALL REQUIRE A FLEXIBLE CONNECTION.

4' 2' 0' 4' 8'

1/4" = 1'-0"

ISSUED FOR CONSTRUCTION

NO.	BY	CHK	APP
1	MAK	MBS	PJD
0	MAK	MBS	PJD

DATE	REVISIONS AND RECORD OF ISSUE
03/30/16	GENERAL REVISIONS
12/09/15	ISSUED FOR CONSTRUCTION

PW: R:\dms21275\3D-M-30-MEMBRANE-B1.rvt
SW:
SAVED: 4/4/2016 2:35:20 PM
PLOTTED:
USER:
DWG VER: 1
XREF1:
XREF2:
XREF3:
XREF4:

BLACK & VEATCH
Building a world of difference.
Black & Veatch Corporation
Virginia Beach, VA

BEDFORD REGIONAL WATER AUTHORITY
SMITH MOUNTAIN LAKE WTP &
RAW WATER PUMPING STATION / INTAKE

MECHANICAL
MEMBRANE/ADMIN BUILDING
ENLARGED OPERATING FLOOR PLAN C

DESIGNED: MBS
DETAILED: MAK
CHECKED: MBS
APPROVED: PJD
DATE: 12/09/15

0 1/2 1
IF THIS BAR DOES NOT MEASURE 1" THEN DRAWING IS NOT TO FULL SCALE

PROJECT NO.
182262

M-30-403
SHEET
OF -

D7000

TUBE DIFFUSER DETAILS			
CHEMICAL	DIFFUSER LOCATION	DIFFUSER MATERIAL	DIFFUSER TUBE DIA, IN
HYDROCHLORIC ACID	CIP NEUTRALIZATION	ALLOY 20	1/2"
SODIUM HYDROXIDE	NEUTRALIZATION	STAINLESS STEEL	1"
SODIUM HYPOCHLORITE	FINISHED WATER AND MEMBRANES	HASTELLOY C-22 OR C-276	1"
SODIUM BISULFITE	NEUTRALIZATION	PVC	1"
CITRIC ACID	CIP	CPVC	1"

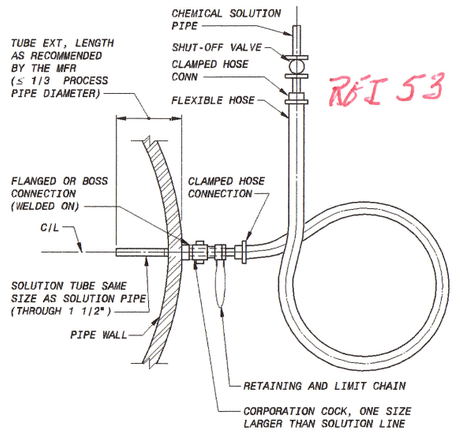

CORPORATION STOP TYPE DIFFUSER FOR CHEMICAL INJECTION (A)
NO SCALE

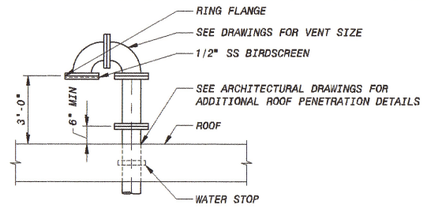

TANK VENT DETAIL (B)
NO SCALE

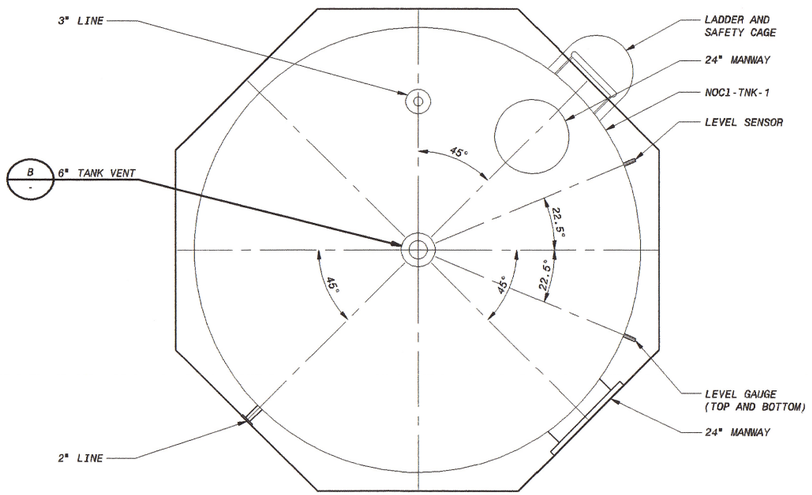

SODIUM HYPOCHLORITE STORAGE TANK
1/2" = 1'-0"

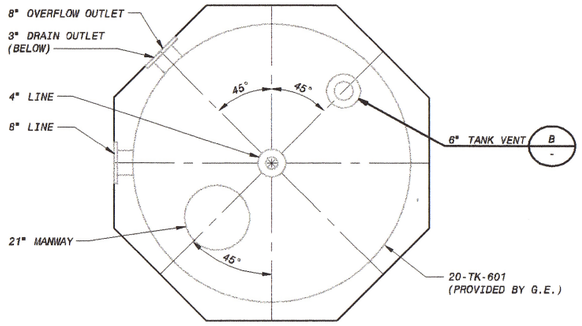

BACKPULSE TANK
1/2" = 1'-0"

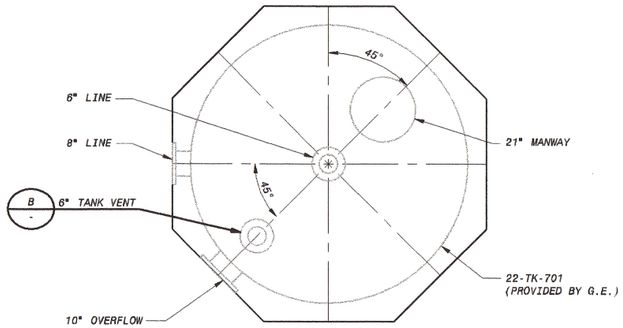

CIP TANK
1/2" = 1'-0"

NOTES:

1. SEE M-30-101 FOR LOCATIONS OF CHEMICAL STORAGE TANKS.
2. SEE M-30-401 AND M-30-403 FOR LOCATIONS OF CIP/NEUT TANKS.
3. SCREENED TANKS PROVIDED BY SIEMENS WATER TECHNOLOGIES (SWT) AND INSTALLED BY CONTRACTOR.

12" 6" 0 1' 2' 3' 4' 5'
1/2"=1'-0"

ISSUED FOR CONSTRUCTION

NO.	BY	CK	APP
0	MAK	MBS	PJD

12/09/15 ISSUED FOR CONSTRUCTION
DATE REVISIONS AND RECORD OF ISSUE
50.3070 - Mechanical Process Drawings
M-30-502.dwg
SAVED:KOE49353, 3/5/2015 12:37:52 PM
PLOTTED:
USER:KOE49353 DWG VER:1000
XREF1:
XREF2:
XREF3:
XREF4:

BLACK & VEATCH
Building a world of difference.
Black & Veatch Corporation
Virginia Beach, VA

BEDFORD REGIONAL WATER AUTHORITY
SMITH MOUNTAIN LAKE WTP &
RAW WATER PUMPING STATION / INTAKE

MECHANICAL DETAILS

DESIGNED: MBS
DETAILED: MAK
CHECKED: MBS
APPROVED: PJD
DATE: 12/09/15

0 1/2 1
IF THIS BAR DOES NOT MEASURE 1" THEN DRAWING IS NOT TO FULL SCALE

PROJECT NO. 182262

M-30-502
SHEET
OF

FD7000
D7000

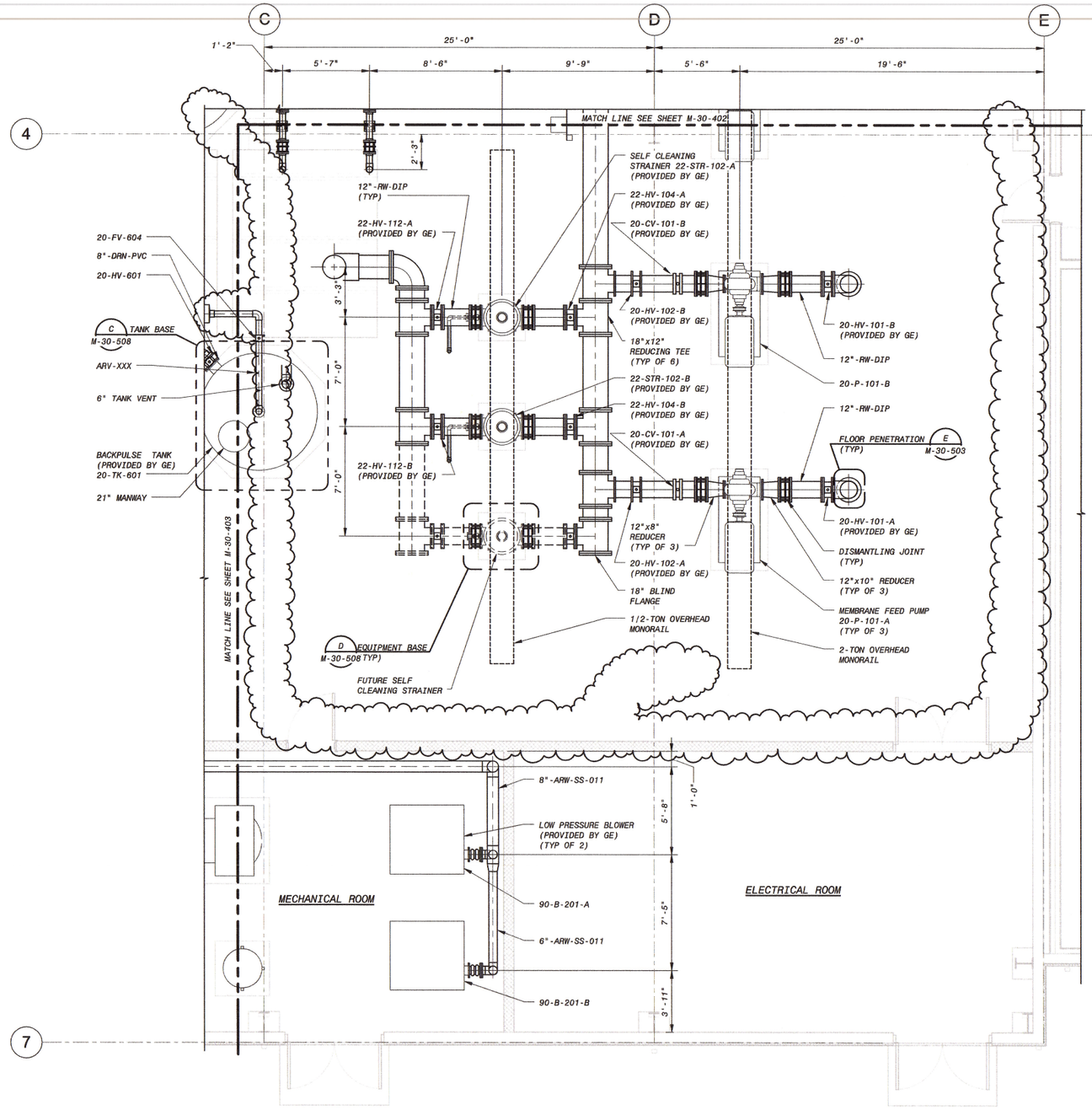

MEMBRANE/ADMIN BUILDING - ENLARGED OPERATING FLOOR PLAN D

1/4" = 1'-0"

ECN 10

REVISED

NOTE:

1. ROUTE CHEMICAL FEED PIPING TO MEMBRANE SYSTEM IN LIPPED PIPE TRAY (CLEAR) TO SKIDS AND CIP/BACKPULSE SYSTEM. SLOPE TRAY TOWARDS TRENCH. PROVIDE TRAY DRAIN PIPE AT TRENCH AND ROUTE TO DRAIN BELOW TRENCH.

4' 2' 0' 4' 8'

1/4" = 1'-0"

ISSUED FOR CONSTRUCTION

NO.	BY	CHK	APP
1	MAK	MBS	PJD
0	MAK	MBS	PJD

GENERAL REVISIONS

DATE	REVISIONS AND RECORD OF ISSUE
03/30/16	ISSUED FOR CONSTRUCTION
12/09/15	

PW: R:\dms21275\3D-M-30-MEMBRANE-B1.rvt
SW:
SAVED: 4/4/2016 2:35:28 PM
PLOTTED:
USER:
XREF1:
XREF2:
XREF3:
XREF4:
DWG VER: 1

COMMONWEALTH OF VIRGINIA PAUL J. DELPHOS Lic. No. 036691 3/30/16

BLACK & VEATCH
Building a world of difference.®
Black & Veatch Corporation
Virginia Beach, VA

BEDFORD REGIONAL WATER AUTHORITY
SMITH MOUNTAIN LAKE WTP &
RAW WATER PUMPING STATION / INTAKE

MECHANICAL
MEMBRANE/ADMIN BUILDING
ENLARGED OPERATING FLOOR PLAN D

DESIGNED:	MBS
DETAILED:	MAK
CHECKED:	MBS
APPROVED:	PJD
DATE:	12/09/15

0 1/2 1
IF THIS BAR DOES NOT MEASURE 1" THEN DRAWING IS NOT TO FULL SCALE

PROJECT NO.
182262

M-30-404
SHEET
OF -

D7000

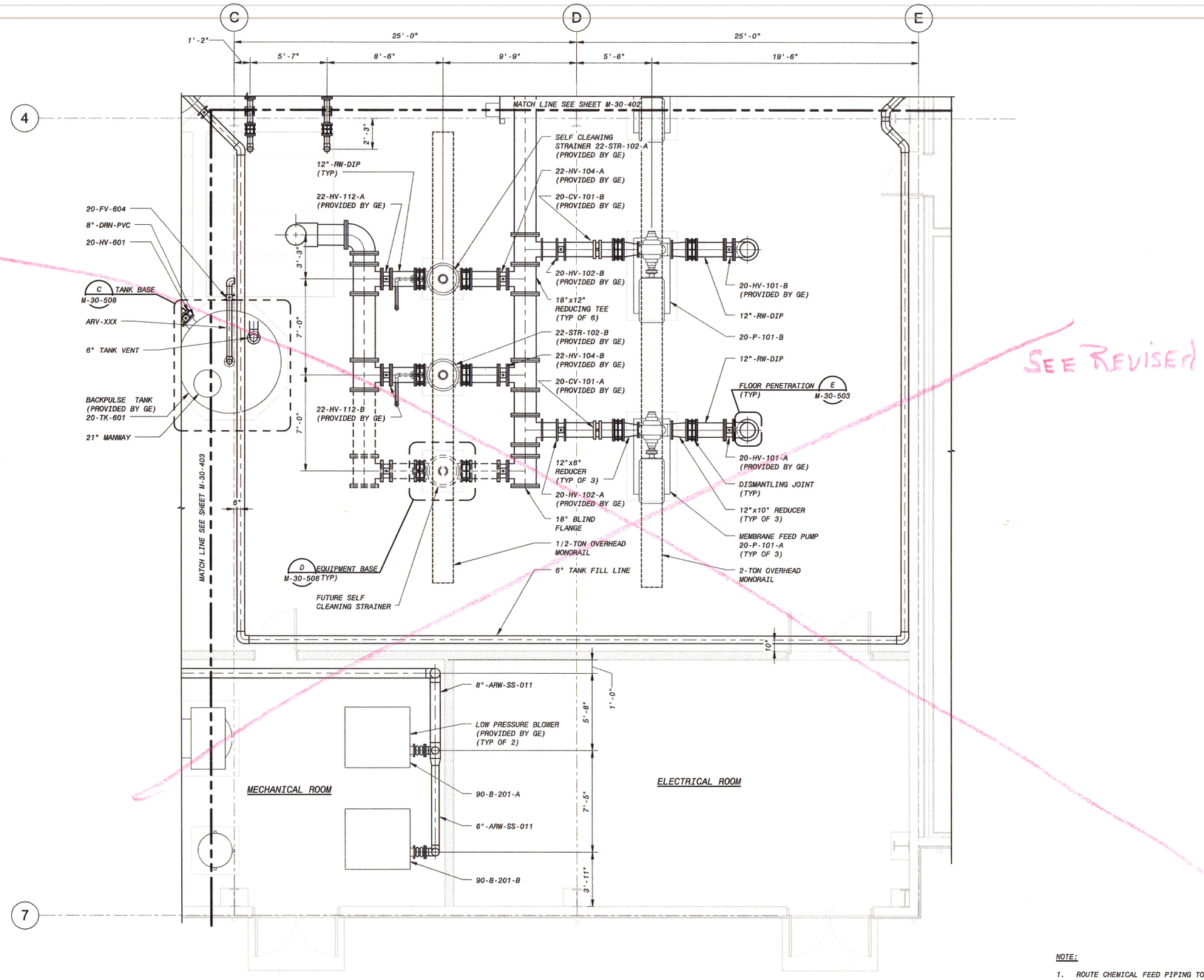

MEMBRANE/ADMIN BUILDING - ENLARGED OPERATING FLOOR PLAN D

1/4" = 1'-0"

NOTE:

1. ROUTE CHEMICAL FEED PIPING TO MEMBRANE SYSTEM IN LIPPED PIPE TRAY (CLEAR) TO SKIDS AND CIP/BACKPULSE SYSTEM. SLOPE TRAY TOWARDS TRENCH. PROVIDE TRAY DRAIN PIPE AT TRENCH AND ROUTE TO DRAIN BELOW TRENCH.

4' 2' 0' 4' 8'

1/4" = 1'-0"

ISSUED FOR CONSTRUCTION

NO.	BY	CHK	APP
0	MAK	MBS	PJD

DATE	REVISIONS AND RECORD OF ISSUE
12/09/15	ISSUED FOR CONSTRUCTION

PW: R:\dms21275\3D-M-30-MEMBRANE-B1.rvt
SW:
SAVED: 12/9/2015 4:20:26 PM
PLOTTED:
USER:
DWG VER:
XREF1:
XREF2:
XREF3:
XREF4:

COMMONWEALTH OF VIRGINIA
PAUL J. DELPHOS
Lic. No. 028861
PROFESSIONAL ENGINEER

BLACK & VEATCH
Building a world of difference.
Black & Veatch Corporation
Virginia Beach, VA

BEDFORD REGIONAL WATER AUTHORITY
SMITH MOUNTAIN LAKE WTP &
RAW WATER PUMPING STATION / INTAKE

MECHANICAL
MEMBRANE/ADMIN BUILDING
ENLARGED OPERATING FLOOR PLAN D

DESIGNED: MBS
DETAILED: MAK
CHECKED: MBS
APPROVED: PJD
DATE: 12/09/15

0 1/2 1
IF THIS BAR DOES NOT MEASURE 1" THEN DRAWING IS NOT TO FULL SCALE

PROJECT NO. 182262

M-30-404
SHEET
OF -

D7000

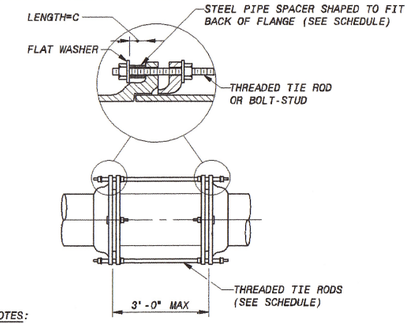

NOTES:

1. PRESSURE SHALL BE THE PRESSURE AT WHICH THE PIPE IS HYDROSTATICALLY TESTED, OR IF THERE IS NO HYDROSTATIC FIELD TEST, IT SHALL BE THE SPECIFIED SHOP TEST PRESSURE.
2. UNLESS OTHERWISE INDICATED, TIE RODS SHALL BE SPACED UNIFORMLY AROUND THE PIPE, BEGINNING WITH THE FIRST TWO AT THE HORIZONTAL CENTERLINE OF THE PIPE, SUBJECT TO THE ACCEPTANCE OF THE ENGINEER.
3. EXCEPT WHERE TIE RODS ARE REQUIRED, BOLTS FOR FOLLOWER RINGS SHALL BE TEE HEAD BOLTS.
4. AT CONTRACTOR'S OPTION, 4" THROUGH 48" MAY BE FURNISHED AS MECHANICAL JOINT STYLE WITH TIE RODS, OR POSITIVE LOCKING SEGMENTS AND/OR RINGS SUCH AS AMERICAN PIPE 14" THROUGH 36" SIZE MAY BE FURNISHED AS FLEX RING STYLE RESTRAINED JOINTS AND 42" THROUGH 64" SIZE MAY BE FURNISHED AS LOC RING STYLE RESTRAINED JOINTS, OR U.S. PIPE "TR-FLEX", OR GRIFFIN PIPE "SNAP-LOCK".

MECHANICAL TIE ROD SCHEDULE

PIPE SIZE (INCHES)	MINIMUM PRESSURE (PSI) (NOTE 1)	TIE RODS		PIPE SPACERS		
		NO. OF RODS (NOTE 2)	DIA OF RODS (INCHES)	DIA OF SPACERS (INCHES)	LENGTH=C (INCHES)	PIPE SCHEDULE
4	350 OR LESS	2	3/4	1	2 1/2	40
6	250 OR LESS 350	2 4	3/4	1	2 1/2	40
8	150 OR LESS 300 350	2 4 6	3/4	1	2 1/2	40
10	200 OR LESS 350	2 4	3/4	1	2 1/2	80
12	150 OR LESS 300 350	2 4 6	3/4	1	2 1/2	80
14	100 OR LESS 200 350	2 4 6	3/4	1	3 1/2	80
16	75 OR LESS 150 250 350	2 4 6 8	3/4	1	3 1/2	80
18	75 OR LESS 150 200 300 350	2 4 6 8 10	3/4	1	3 1/2	80
20	50 OR LESS 100 150 200 300 350	2 4 6 8 10 12	3/4	1	3 1/2	80
24	75 OR LESS 100 150 200 250 300 350	4 6 8 10 12 14 16	3/4	1	3 1/2	80
30	50 OR LESS 100 150 200 250	4 8 10 12 16	1	1 1/4	4	80
36	50 OR LESS 100 150 200 250	4 8 12 18 22	1	1 1/4	4	80
42	50 OR LESS 100 150 200 250	4 8 12 16 20	1 1/4	1 1/2	4	80
48	100 OR LESS 150 200 250	12 16 22 28	1 1/4	1 1/2	4	80

DIP MECHANICAL JOINT COUPLING WITH TIE RODS (A)
NO SCALE

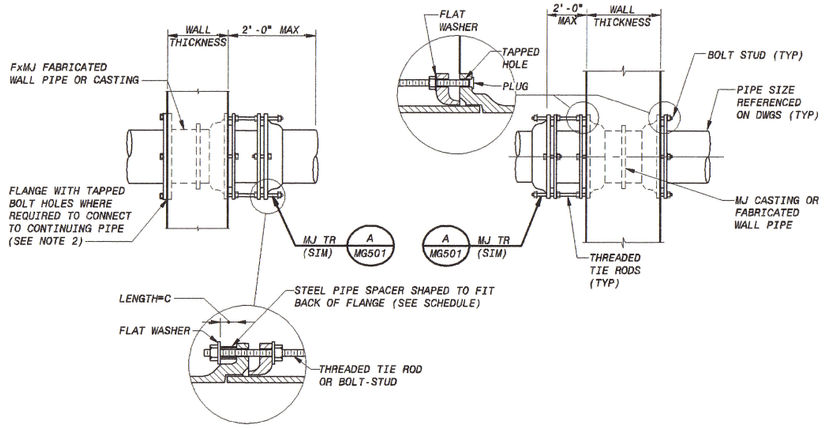

NOTES:

1. MECHANICAL JOINT OR PUSH-ON STYLE FITTINGS MAY BE FURNISHED WHERE RESTRAINED JOINTS ARE NOT CALLED FOR ON THE DRAWINGS OR SPECIFICATIONS.
2. EXCEPT WHERE TIE RODS ARE REQUIRED, BOLTS FOR FOLLOWER RINGS SHALL BE BOLT-STUDS ON WALL PIPE. ALL BOLT HOLES IN WALL PIPE SHALL BE TAPPED. WALL PIPES SHALL BE ORIENTED SO THAT THE BOLT HOLES STRADDLE THE TOP CENTERLINE.
3. USE WAX TO PROTECT ALL BURIED FERROUS SURFACES, INCLUDING PAINTED SURFACES. FOR PROTECTION OF ADJACENT PIPE BARREL SURFACES, SHRINK WRAP MAY BE USED IN LIEU OF WAX TAPE. SEE SPECIFICATIONS.
4. WHERE PIPE IS REQUIRED ON ONE SIDE ONLY, PROVIDE MJxPE WALL PIPE.

DIP MECHANICAL JOINT WALL PIPE WITH TIE RODS (B)
NO SCALE

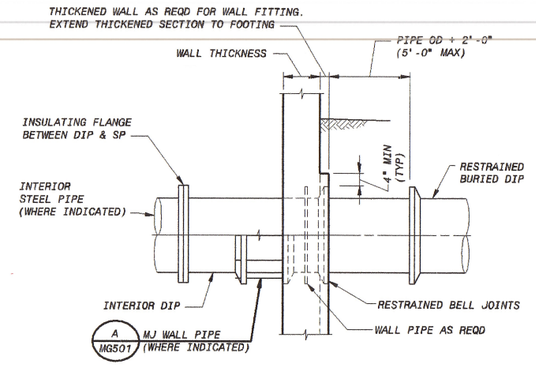

TYPICAL DIP WALL FITTING FOR BURIED PIPE (C)
NO SCALE

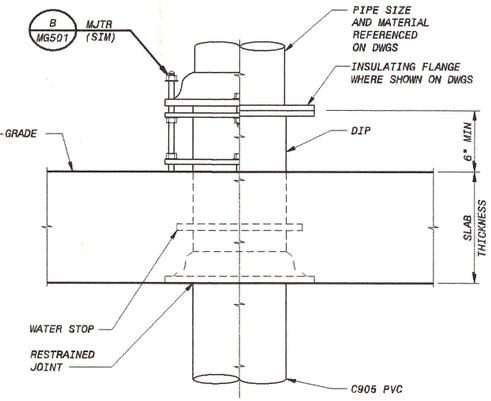

SLAB-ON-GRADE FLOOR PIPE (D)
NO SCALE

TIE ROD SCHEDULE			
PIPE SIZE (IN)	MAXIMUM PRESSURE (PSI) (NOTE 1)	TIE RODS NO. OF RODS (NOTE 2)	TIE RODS DIA (IN)
6	250 OR LESS	2	3/4
8	150 OR LESS	2	3/4
10	200 OR LESS	2	3/4
	350	6	3/4
12	150 OR LESS	2	3/4
	300	4	3/4
14	100 OR LESS	2	3/4
	200	4	3/4
16	75 OR LESS	2	3/4
	150	4	3/4
18	75 OR LESS	2	3/4
	150	4	3/4
20	50 OR LESS	2	3/4
24	75	4	3/4
30	50 OR LESS	4	1
36	50 OR LESS	4	1
	100	8	1
42	50 OR LESS	4	1 1/4

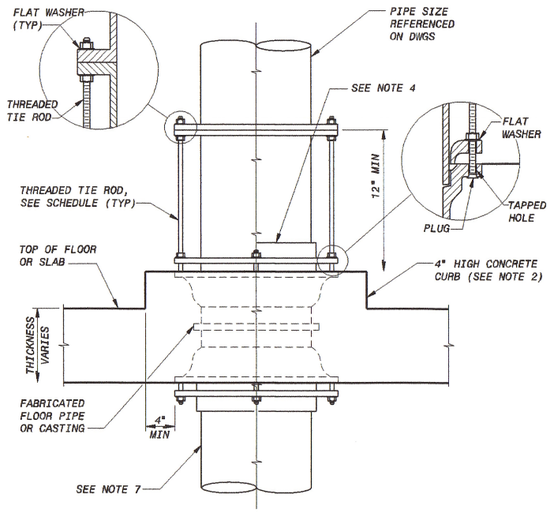

NOTES:

1. PRESSURE SHALL BE THE PRESSURE AT WHICH THE PIPE IS HYDROSTATICALLY TESTED, OR IF THERE IS NO HYDROSTATIC FIELD TEST, IT SHALL BE THE SPECIFIED SHOP TEST PRESSURE.
2. ORIENTATION OF FLOOR PIPE SHALL BE COORDINATED WITH CONNECTING PIPE AND TIE RODS, TIE RODS SHALL BE SPACED UNIFORMLY AROUND THE PIPE.
3. EXCEPT WHERE TIE RODS ARE REQUIRED, BOLTS FOR FOLLOWER RINGS SHALL BE BOLT-STUDS ON FLOOR PIPE. ALL BOLT HOLES IN FLOOR PIPE SHALL BE TAPPED. FLOOR PIPES SHALL BE ORIENTED SO THAT THE BOLT HOLES ALIGN WITH FLANGE BOLT HOLES.
4. CURB MAY BE ROUND OR HEXAGONAL AT CONTRACTOR'S OPTION.
5. WHERE PIPE IS REQUIRED ON ONE SIDE OF THE SLAB ONLY, PROVIDE A MJxPE FITTING.
6. SLAB-ON-GRADE APPLICATIONS REQUIRE CONCRETE ENCASEMENT OF BELOW FLOOR PIPING. RESTRAINED STYLE JOINTS ARE REQUIRED WHERE PIPE IS CONCRETE ENCASED.

FLANGED - MECHANICAL JOINT FLOOR PIPE WITH TIE RODS (E)
NO SCALE

ISSUED FOR CONSTRUCTION

NO.	BY	CK	APP	DATE	REVISIONS AND RECORD OF ISSUE
0	MAK	MBS	PJD	12/09/15	ISSUED FOR CONSTRUCTION

50.3070 - Mechanical Process Drawings
SAVED: M-30-503.dwg 3/5/2015 12:41:32 PM
PLOTTED:
USER: KOF49353
XREF1:
XREF2:
XREF3:
XREF4:
DWG VER: 1000

COMMONWEALTH OF VIRGINIA — CHRISTOPHER PAUL J. DELPHOS — No. 049353 — REGISTERED PROFESSIONAL ENGINEER

BLACK & VEATCH
Building a world of difference.®
Black & Veatch Corporation
Virginia Beach, VA

BEDFORD REGIONAL WATER AUTHORITY
SMITH MOUNTAIN LAKE WTP &
RAW WATER PUMPING STATION / INTAKE

MECHANICAL DETAILS

DESIGNED: MBS
DETAILED: MAK
CHECKED: MBS
APPROVED: PJD
DATE: 12/09/15

0 1/2 1
IF THIS BAR DOES NOT MEASURE 1" THEN DRAWING IS NOT TO FULL SCALE

PROJECT NO.
182262

M-30-503
SHEET
OF

FD7000
D7000

STEEL PIPE TIE BOLT SCHEDULE FOR HARNESSED JOINTS

NOMINAL PIPE SIZE (in.)	PRESSURE (psi) (NOTE 1)	LUG TYPE	TIE BOLT DIA. (in.)	NO. BOLTS (NOTE 3)
6	250 OR LESS	P	5/8	2
8	250 OR LESS	P	5/8	2
10	50	P	5/8	2
	100	P	5/8	2
	150	P	5/8	2
	200	P	3/4	2
12	50	P	5/8	2
	100	P	5/8	2
	150	P	3/4	2
	200	P	3/4	2
14	50	RR	5/8	2
	100	RR	5/8	2
	150	RR	3/4	2
	200	RR	7/8	2
16	50	RR	5/8	2
	100	RR	3/4	2
	150	RR	7/8	2
	200	RR	1	2
18	50	RR	5/8	2
	100	RR	7/8	2
	150	RR	1	2
	200	RR	1 1/4	2
20	50	RR	5/8	2
	100	RR	7/8	2
	150	RR	1 1/8	2
	200	RR	1 1/4	2
24	50	RR	3/4	2
	100	RR	3/4	4
	150	RR	1	4
	200	RR	1 1/8	4
30	50	RR	3/4	4
	100	RR	1	4
	150	RR	1 1/8	4
	200	RR	1 1/4	4
36	50	RR	7/8	4
	100	RR	1 1/8	4
	150	RR	1 3/8	4
	200	RR	1 1/4	6
42	50	RR	7/8	4
	100	RR	1 1/4	4
	150	RR	1 1/4	6
	200	RR	1 1/2	6

NOTES:

1. PRESSURE SHALL BE THE PRESSURE AT WHICH THE PIPE IS HYDROSTATICALLY TESTED, OR IF THERE IS NO HYDROSTATIC FIELD TEST, IT SHALL BE THE SPECIFIED SHOP TEST PRESSURE.
2. NUMBER OF TIE BOLTS IS BASED ON AN ALLOWABLE STRESS ON NET TENSION AREA OF 40,000 PSI.
3. UNLESS OTHERWISE INDICATED, TIE BOLTS SHALL BE SPACED UNIFORMLY AROUND THE PIPE, BEGINNING WITH THE FIRST TWO AT THE HORIZONTAL ℄ OF THE PIPE, SUBJECT TO THE APPROVAL OF THE ENGINEER.

DIMENSIONS IN INCHES									
TIE BOLT DIA	T	A	Y	W	X	HB	E	HF	HOLE DIA
5/8	3/8	5	5	1 3/8	5	3 7/8	3	2	3/4
3/4	3/8	5	5	1 1/2	5	4 1/8	3 1/8	2	7/8
7/8	1/2	5 1/2	5	1 5/8	5	4 1/4	3 1/8	2	1
1	1/2	5 3/4	RING	1 3/4	RING	4 1/2	3 1/4	2	1 1/8
1 1/8	1/2	7	RING	1 7/8	RING	4 3/4	3 5/8	2 1/2	1 1/4
1 1/4	5/8	7 1/2	RING	2	RING	5	3 3/4	2 1/2	1 3/8

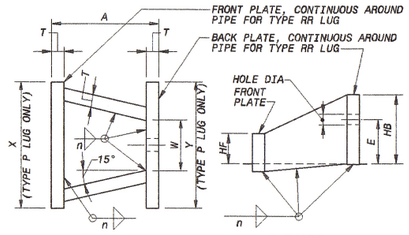

PLAN ELEVATION

NOTES:
1. n = PIPE WALL THICKNESS
2. FOR HARNESS LUG TYPE RR, THE GUSSET PLATES BETWEEN THE FRONT PLATE AND THE BACK PLATE MAY BE PERPENDICULAR TO THE FRONT AND BACK PLATES WITH A MINIMUM CLEAR DISTANCE BETWEEN EACH PAIR OF GUSSET PLATES OF DIMENSION W.

STEEL PIPE HARNESS LUG DETAIL (C MG502)
NO SCALE

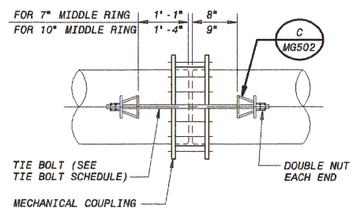

STEEL PIPE HARNESSED MECHANICAL COUPLING WITH TYPE P LUGS (A)
NO SCALE

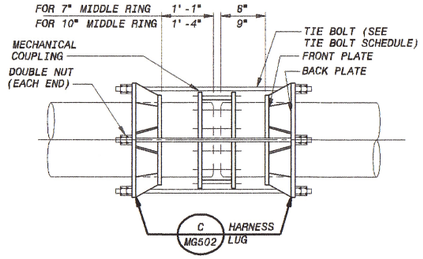

STEEL PIPE HARNESSED MECHANICAL COUPLING WITH TYPE RR LUGS (B)
NO SCALE

NOTE:

1. THE PIPE FOR LUG DESIGN SHALL INCLUDE WRAPPERS OR PADS OR PIPE WALL THICKNESS INCREASED AS REQUIRED TO MEET MINIMUM PIPE THICKNESS IN ACCORDANCE WITH AWWA M-11 DESIGN REQUIREMENTS.

NOTE:

1. THE PIPE FOR LUG DESIGN SHALL INCLUDE WRAPPERS OR PADS OR PIPE WALL THICKNESS INCREASED AS REQUIRED TO MEET MINIMUM PIPE THICKNESS IN ACCORDANCE WITH AWWA M-11 DESIGN REQUIREMENTS.

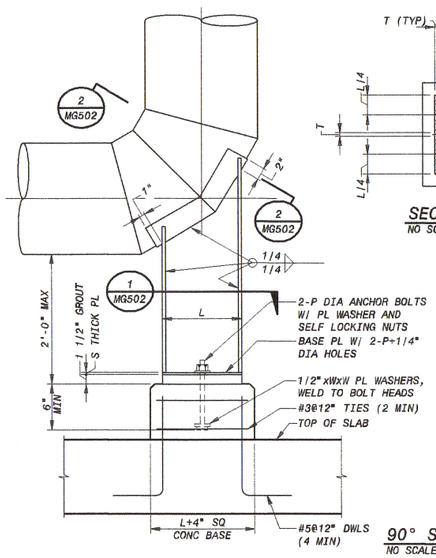

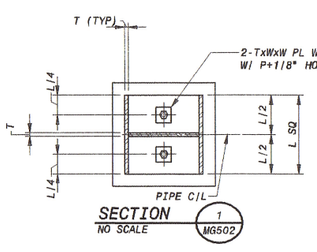

SECTION (1 MG502)
NO SCALE

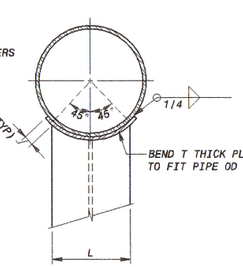

SECTION (2 MG502)
NO SCALE

DIMENSIONS IN INCHES				
PIPE SIZE	T	S	W	P
12-16	1/4	3/8	1 3/4	3/4
18-24	1/4	3/8	2 1/2	3/4
30-36	3/8	1/2	3 1/2	3/4
42	7/16	5/8	4	3/4
48	1/2	5/8	4	3/4
54	9/16	3/4	4	1
60	5/8	7/8	4	1
OVER 60	3/4	1	4	1

L = PIPE O.D. x (sin 45)

90° STEEL PIPE BASE ELBOW SUPPORT (D)
NO SCALE

NO.	BY	CK	APP	DATE	REVISIONS AND RECORD OF ISSUE
D				09/28/15	FOR BUILDING PERMIT APPROVAL ONLY
C				08/14/15	ISSUED FOR FINAL REVIEW AND PRICING
B				07/31/15	ISSUED FOR PERMITTING
A				02/20/15	GMP DRAWINGS

50.3070 - Mechanical Process Drawings

M-30-504.dwg

SAVED: KOE49353, 3/5/2015 12:49:35 PM

PLOTTED:

USER: KOE49353

DWG VER: 1000

XREF1:
XREF2:
XREF3:
XREF4:

COMMONWEALTH OF VIRGINIA — PAUL J. FILIPOS — No. 049 — PROFESSIONAL ENGINEER

BLACK & VEATCH
Building a world of difference.
Black & Veatch Corporation
Virginia Beach, VA

BEDFORD REGIONAL WATER AUTHORITY
SMITH MOUNTAIN LAKE WTP &
RAW WATER PUMPING STATION / INTAKE

MECHANICAL DETAILS

DESIGNED: AOE
DETAILED: VVV
CHECKED:
APPROVED:
DATE: DECEMBER 2014

0 1/2 1
IF THIS BAR DOES NOT MEASURE 1" THEN DRAWING IS NOT TO FULL SCALE

PROJECT NO.
182262

M-30-504
SHEET
OF

FOR BUILDING PERMIT APPROVAL ONLY

FD7000
D7000

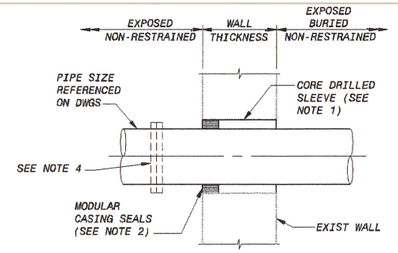

NOTES:

1. CORE DRILL SMOOTH WALL OPENING, COORDINATE CORE DIAMETER AS REQUIRED WITH CASING SEAL MANUFACTURER. MAXIMUM CORE DIAMETER SHALL BE 12".
2. WHEN SOIL MAY BE PRESENT, USE TWO SETS OF CASING SEALS. ONE AT EACH FACE OF WALL.
3. FIRESAFING TO BE PROVIDED AT ALL RATED WALLS INDICATED ON THE DRAWINGS AND INSTALLED PER ACCEPTED UL RATED SYSTEM.
4. TO MINIMIZE SLEEVE SIZE, PROVIDE A SCREW-ON FLANGE, GROOVED COUPLING, OR MECHANICAL COUPLING WITH ANCHOR STUDS ON ONE SIDE OF OPENING.
5. FOR BURIED PIPING, CONTRACTOR SHALL PROVIDE AN ADDITIONAL FIELD JOINT AS CLOSE AS PRACTICAL TO FACE OF WALL, BUT NO MORE THAN 5 FEET.
6. USE WAX TAPE TO PROTECT ALL BURIED FERROUS SURFACES INCLUDING PAINTED SURFACES. FOR PROTECTION OF ADJACENT PIPE BARREL SURFACES, SHRINK WRAP MAY BE USED IN LIEU OF WAX TAPE. SEE SPECIFICATIONS.

CORE DRILLED WALL SLEEVE (A)
NO SCALE

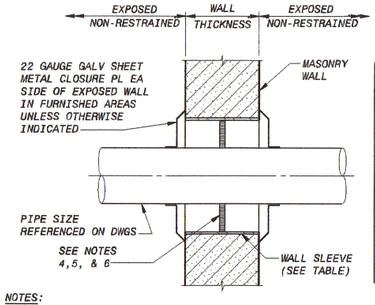

WALL SLEEVE TABLE	
PIPE SIZE	SLEEVE SIZE UNLESS OTHERWISE INDICATED (SEE NOTES 3 & 4)
1"& SMALLER	3"
1 1/4"&1 1/2"	3 1/2"
2" & 2 1/2"	4"
3"	6"
4"	6"
6"	8"
8"& LARGER	PIPE OD+2"±

NOTES:

1. SCHEDULE 40 GALV STEEL PIPE FOR PIPING SMALLER THAN 3", SCHEDULE 20 GALV STEEL PIPE FOR PIPING SMALLER THAN 6", AND GALV 1/4" MINIMUM WALL THICKNESS FOR PIPING LARGER THAN 6".
2. FOR PIPING LARGER THAN 3" PROVIDE PIPE SUPPORT WITHIN 3' OF WALL SLEEVE TO PREVENT THE TRANSFER OF PIPE LOADS TO MASONRY WALL WHEN MODULAR CASING SEALS ARE USED.
3. WHERE REQUIRED, USE SLEEVE LARGE ENOUGH FOR FLANGE OR OTHER JOINT RESTRAINT TO PASS THROUGH.
4. FOR PIPE SIZES 1 1/2" IN DIAMETER AND SMALLER, CAULK ANNULAR SPACE AROUND PIPE. FOR PIPE LARGER THAN 1 1/2" IN DIAMETER, USE MODULAR CASING SEALS AND COORDINATE SLEEVE SIZE WITH CASING SEAL MANUFACTURER.
5. PROVIDE MODULAR CASING SEALS ON ALL SLEEVES AT CHLORINE AND AMMONIA FEED AND STORAGE ROOMS AND WHERE INDICATED ON THE DRAWINGS. COORDINATE SLEEVE SIZE WITH CASING SEAL MANUFACTURER.
6. FIRESAFING TO BE PROVIDED AT ALL RATED WALLS INDICATED ON THE DRAWINGS AND INSTALLED PER ACCEPTED UL RATED SYSTEMS.

MASONRY WALL SLEEVE (B)
NO SCALE

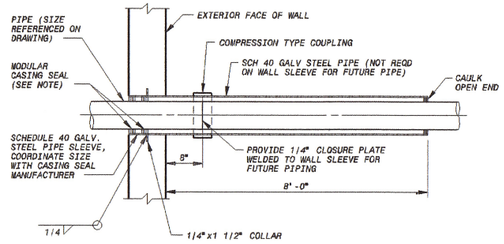

NOTE: PROVIDE 2 SEALS FOR WALLS 12" AND WIDER.

EXTERIOR WALL SLEEVE FOR PLASTIC PIPE (C)
NO SCALE

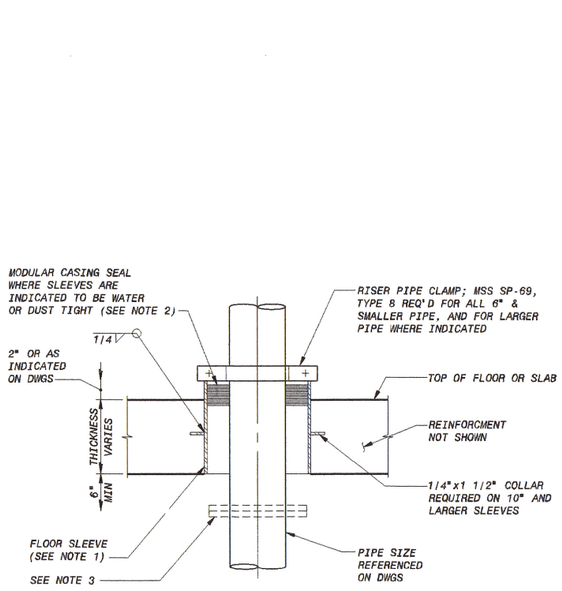

NOTES:

1. FLOOR SLEEVE, SCHEDULE 40 STEEL PIPE FOR 12" AND SMALLER SLEEVES, 1/4" STEEL PIPE FOR SLEEVES LARGER THAN 12", AND HOT DIP GALVANIZE AFTER FABRICATION. COORDINATE SIZE OF SLEEVE WITH MODULAR SEAL MANUFACTURER.
2. FIRESAFING TO BE PROVIDED AT ALL RATED LOCATIONS INDICATED ON THE DRAWINGS AND INSTALLED PER ACCEPTED UL RATED SYSTEMS.
3. TO MINIMIZE SLEEVE SIZE PROVIDE A SCREW-ON FLANGE, GROOVED COUPLING, OR MECHANICAL COUPLING WITH ANCHOR STUDS ON ONE SIDE OF OPENING.

STEEL FLOOR SLEEVE (D)
NO SCALE

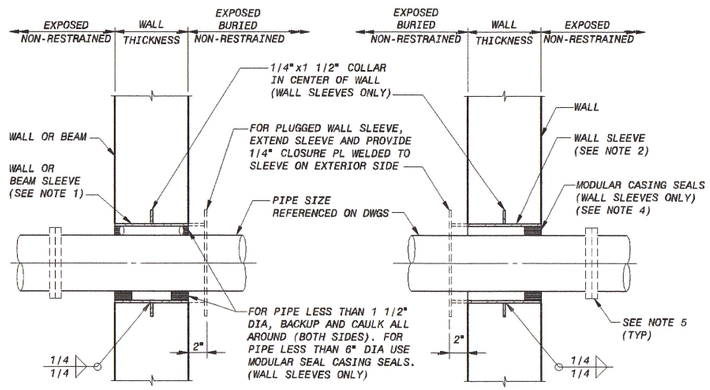

NOTES:

1. SCHEDULE 40 GALV STEEL PIPE SLEEVE. SIZE TO PROVIDE 3/4" ANNULAR SPACE AROUND PIPE FOR ALL BEAM SLEEVES AND FOR WALL SLEEVES FOR PIPES SMALLER THAN 1 1/2" DIAMETER. FOR PIPE SMALLER THAN 6" DIAMETER, COORDINATE WALL SLEEVE DIAMETER WITH MODULAR CASING SEAL MANUFACTURER.
2. WALL SLEEVE, SCHEDULE 40 STEEL PIPE FOR 12" AND SMALLER SLEEVES, 1/4" STEEL PIPE FOR SLEEVES LARGER THAN 12", AND HOT DIP GALVANIZED AFTER FABRICATION, 304 SS, OR OTHER MATERIAL AS SPECIFIED OR INDICATED ON DRAWINGS. COORDINATE WALL SLEEVE DIAMETER WITH MODULAR CASING SEAL MANUFACTURER.
3. FIRESAFING TO BE PROVIDED AT ALL RATED WALLS INDICATED ON THE DRAWINGS AND INSTALLED PER ACCEPTED UL RATED SYSTEM.
4. WHERE SOIL MAY BE PRESENT, USE TWO SETS OF CASING SEALS. ONE AT EACH FACE OF WALL.
5. TO MINIMIZE SLEEVE SIZE, PROVIDE A SCREW-ON FLANGE, GROOVED COUPLING, OR MECHANICAL COUPLING WITH ANCHOR STUDS ON ONE SIDE OF OPENING.
6. FOR BURIED PIPING, CONTRACTOR SHALL PROVIDE AN ADDITIONAL FIELD JOINT AS CLOSE AS PRACTICAL TO FACE OF WALL, BUT NO MORE THAN 5 FEET.
7. USE WAX TAPE TO PROTECT ALL BURIED FERROUS SURFACES INCLUDING PAINTED SURFACES. FOR PROTECTION OF ADJACENT PIPE BARREL SURFACES, SHRINK WRAP MAY BE USED IN LIEU OF WAX TAPE. SEE SPECIFICATIONS.

CONCRETE WALL OR BEAM SLEEVE (E)
NO SCALE

ISSUED FOR CONSTRUCTION

NO.	BY	CK	APP	DATE	ISSUED FOR CONSTRUCTION
0	MAK	MBS	PJD	12/09/15	

50-3070 - Mechanical Process Drawings
M-30-505.dwg
SAVED: KOE49383, 3/5/2015 12:45:21 PM
PLOTTED:
USER: KOE49383
REVISIONS AND RECORD OF ISSUE
XREF1:
XREF2:
XREF3:
XREF4:
DWG VER: 1000

COMMONWEALTH OF VIRGINIA PAUL J. DELPHOS Lic. No. 0402 PROFESSIONAL ENGINEER 12/9/15

BLACK & VEATCH
Building a world of difference.®
Black & Veatch Corporation
Virginia Beach, VA

BEDFORD REGIONAL WATER AUTHORITY
SMITH MOUNTAIN LAKE WTP &
RAW WATER PUMPING STATION / INTAKE

MECHANICAL DETAILS

DESIGNED: MBS
DETAILED: MAK
CHECKED: MBS
APPROVED: PJD
DATE: 12/09/15

0 1/2 1
IF THIS BAR DOES NOT MEASURE 1" THEN DRAWING IS NOT TO FULL SCALE

PROJECT NO.
182262

M-30-505
SHEET
OF

FD7000
D7000

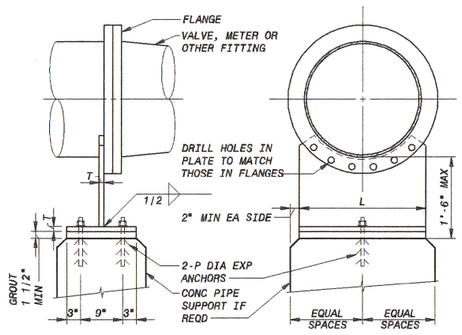

ELEVATION SECTION

PIPE SIZE	T	P	L
<20	5/8"	5/8"	PIPE OD
20	3/4"	3/4"	18"
24	3/4"	3/4"	21"
30	3/4"	3/4"	27"
36	3/4"	3/4"	33"
42	3/4"	3/4"	36"
48	3/4"	3/4"	42"
54	3/4"	3/4"	44"
60	3/4"	3/4"	50"

FLANGE PIPE SUPPORT A
NO SCALE

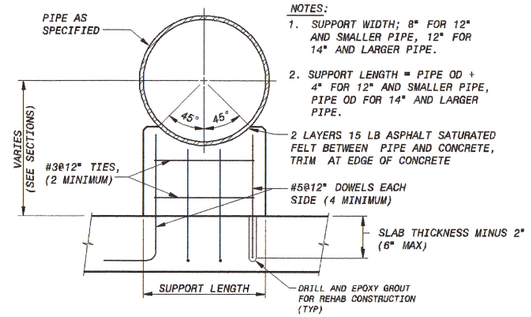

NOTES:
1. SUPPORT WIDTH; 8" FOR 12" AND SMALLER PIPE, 12" FOR 14" AND LARGER PIPE.
2. SUPPORT LENGTH = PIPE OD + 4" FOR 12" AND SMALLER PIPE, PIPE OD FOR 14" AND LARGER PIPE.
2 LAYERS 15 LB ASPHALT SATURATED FELT BETWEEN PIPE AND CONCRETE, TRIM AT EDGE OF CONCRETE

CONCRETE PIPE SUPPORT B
NO SCALE

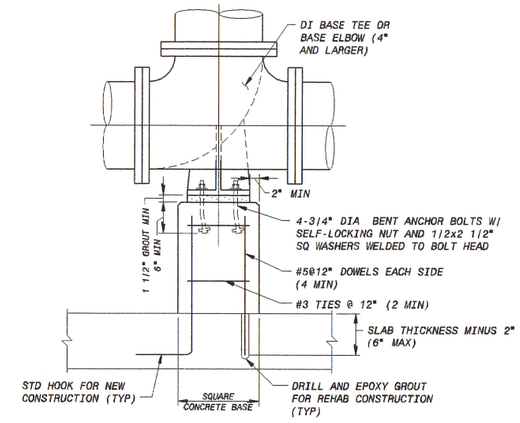

CONCRETE SUPPORT FOR CAST IRON BASE TEE OR BASE ELBOW C
NO SCALE

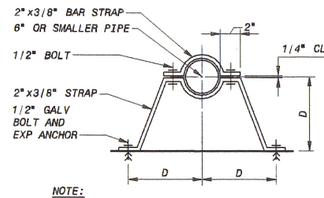

NOTE:
1. D=DISTANCE FROM WALL SHOWN ON PLAN OR SECTION.

VERTICAL PIPE - LATERAL SUPPORT E
NO SCALE

RFI 7 + 51

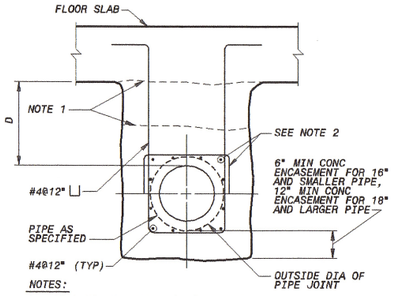

NOTES:
1. IF D IS LESS THAN 1'-6", PROVIDE ENCASEMENT CONTINUOUS TO SLAB. IF D IS GREATER THAN 1'-6", ENCASEMENT MAY BE SEPARATED FROM SLAB UNLESS OTHERWISE NOTED. ENCASEMENT MUST BE CONTINUOUS TO SLAB UNDER STRUCTURES SUPPORTED BY PIERS.
2. FOR D GREATER THAN 1'-6", #4 ⊔'S MAY BE SEPARATED FROM SLAB. PROVIDE #4 ⊓ @12" AND #4@12" HORIZONTAL BARS IN TOP OF ENCASEMENT.
3. WHERE PIPELINE CHANGES FROM AN ENCASED PIPELINE TO A BURIED PIPELINE, PROVIDE A BELL IN THE END OF ENCASEMENT FOR DIP AND PCCP AND A MECHANICAL COUPLING 2 FT FROM END OF ENCASEMENT FOR STEEL PIPE OPTION, EXCEPT IN LOCATIONS WHERE AN INSULATING FLANGE IS INDICATED ON THE DRAWINGS.

CONCRETE ENCASEMENT F
NO SCALE

ISSUED FOR CONSTRUCTION

NO.	BY	CK	APP
0	MAK	MBS	PJD

12/09/15 ISSUED FOR CONSTRUCTION

DATE REVISIONS AND RECORD OF ISSUE

50-3070 - Mechanical Process Drawings

M-30-506.dwg

SAVED: 12/9/2015 2:44:55 PM

PLOTTED:

USER: KOF49353

DWG VER: 1000

XREF1:
XREF2:
XREF3:
XREF4:

COMMONWEALTH OF VIRGINIA PAUL J. DELPHOS No. 049353 PROFESSIONAL ENGINEER

BLACK & VEATCH
Building a world of difference.
Black & Veatch Corporation
Virginia Beach, VA

BEDFORD REGIONAL WATER AUTHORITY
SMITH MOUNTAIN LAKE WTP &
RAW WATER PUMPING STATION / INTAKE

MECHANICAL DETAILS

DESIGNED: MBS
DETAILED: MAK
CHECKED: MBS
APPROVED: PJD
DATE: 12/09/15

0 1/2 1
IF THIS BAR DOES NOT MEASURE 1" THEN DRAWING IS NOT TO FULL SCALE

PROJECT NO. 182262

M-30-506
SHEET OF

F37000
D7000

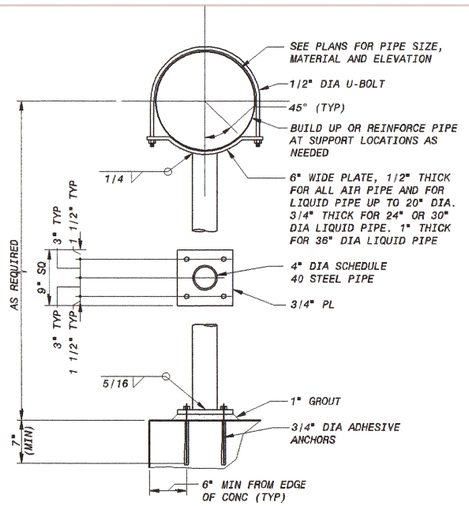

NOTE:
1. ALL STEEL MATERIALS SHALL BE HOT-DIP GALVANIZED FOR EXTERIOR LOCATIONS. VENT HOLES FOR GALVANIZING SHALL BE THE MINIMUM SIZE NECESSARY. HOLES SHALL BE LOCATED IN THE BOTTOM BASEPLATE AND ALSO LOCATED IN THE TOP OF THE PIPE, ADJACENT TO THE CURVED PLATE.

4 INCH DIAMETER STEEL COLUMN PIPE SUPPORT (A)
1" = 1'-0"

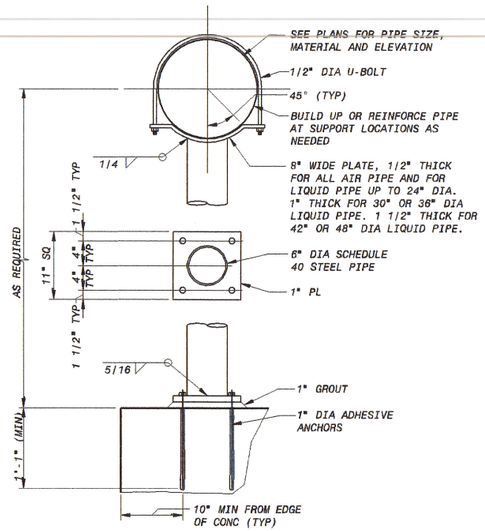

NOTE:
1. ALL STEEL MATERIALS SHALL BE HOT-DIP GALVANIZED FOR EXTERIOR LOCATIONS. VENT HOLES FOR GALVANIZING SHALL BE THE MINIMUM SIZE NECESSARY. HOLES SHALL BE LOCATED IN THE BOTTOM BASEPLATE AND ALSO LOCATED IN THE TOP OF THE PIPE, ADJACENT TO THE CURVED PLATE.

6 INCH DIAMETER STEEL COLUMN PIPE SUPPORT (B)
1" = 1'-0"

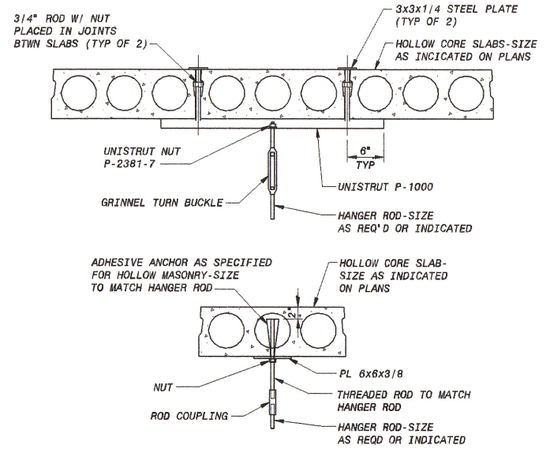

PIPE HANGER SUPPORT DETAILS (C)
1" = 1'-0"

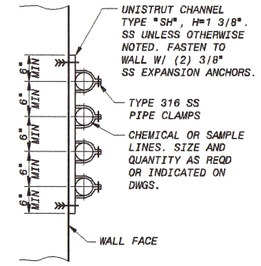

CHEMICAL AND SAMPLE LINE SUPPORT (D)
NO SCALE

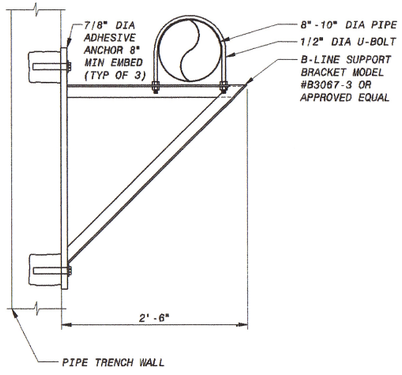

PIPE TRENCH - PIPE SUPPORT BRACKET (E)
1" = 1'-0"

ISSUED FOR CONSTRUCTION

NO	BY	CK	APP
0	MAK	MBS	PJD

12/09/15 ISSUED FOR CONSTRUCTION

DATE — REVISIONS AND RECORD OF ISSUE

50.3070 - Mechanical Process Drawings

M-30-507.dwg

SAVED: VAN16643, 12/29/2014 9:18:51 AM

PLOTTED:

USER: K0649353

XREF1:
XREF2:
XREF3:
XREF4:

DWG VER: 1000

BLACK & VEATCH
Building a world of difference.
Black & Veatch Corporation
Virginia Beach, VA

BEDFORD REGIONAL WATER AUTHORITY
SMITH MOUNTAIN LAKE WTP &
RAW WATER PUMPING STATION / INTAKE

MECHANICAL DETAILS

DESIGNED: MBS
DETAILED: MAK
CHECKED: MBS
APPROVED: PJD
DATE: 12/09/15

0 1/2 1
IF THIS BAR DOES NOT MEASURE 1" THEN DRAWING IS NOT TO FULL SCALE

PROJECT NO. 182262

M-30-507
SHEET
OF

FD12000
D7000

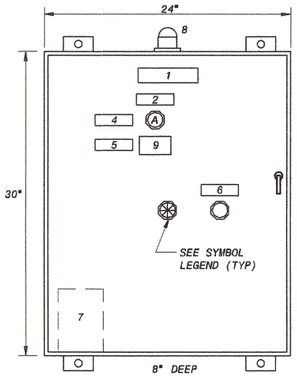

SODIUM HYPOCHLORITE CHEMICAL TRUCK UNLOADING PANEL	
ITEM NO.	DESCRIPTION
1	NAMEPLATE - "SODIUM HYPOCHLORITE CHEMICAL TRUCK UNLOADING PANEL"
2	NAMEPLATE - "SODIUM HYPOCHLORITE STORAGE TANK NOCL-TNK-1"
3	
4	NAMEPLATE - "TANK LEVEL HIGH"
5	NAMEPLATE - "TANK LEVEL"
6	NAMEPLATE - "ALARM SILENCE"
7	ELECTRIC HEATER WITH FAN
8	STROBE TYPE BEACON ALARM LIGHT - AMBER
9	DIGITAL PANEL INDICATOR

SODIUM HYPOCHLORITE CHEMICAL TRUCK UNLOADING PANEL
NO SCALE

SYMBOL LEGEND:

- (A) INDICATING LIGHT - AMBER
- PUSHBUTTON
- ALARM HORN
- ◆ REMOTE FROM STARTER & DRIVEN EQUIPMENT

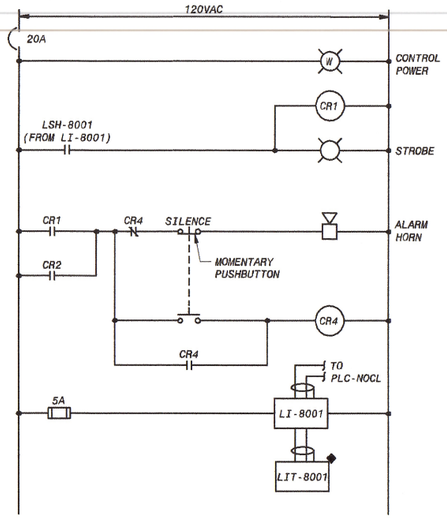

SODIUM HYPOCHLORITE CHEMICAL TRUCK UNLOADING PANEL
NO SCALE

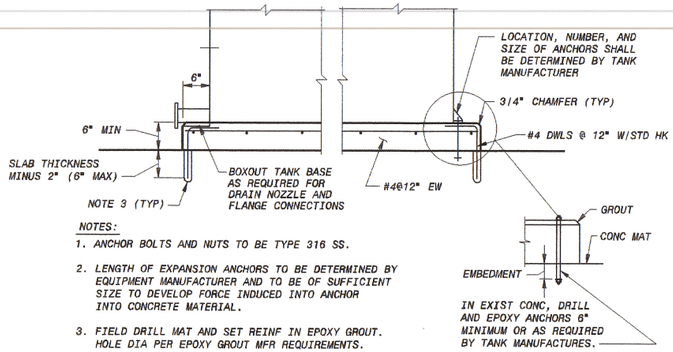

NOTES:
1. ANCHOR BOLTS AND NUTS TO BE TYPE 316 SS.
2. LENGTH OF EXPANSION ANCHORS TO BE DETERMINED BY EQUIPMENT MANUFACTURER AND TO BE OF SUFFICIENT SIZE TO DEVELOP FORCE INDUCED INTO ANCHOR INTO CONCRETE MATERIAL.
3. FIELD DRILL MAT AND SET REINF IN EPOXY GROUT. HOLE DIA PER EPOXY GROUT MFR REQUIREMENTS.

TANK BASE (C)
NO SCALE

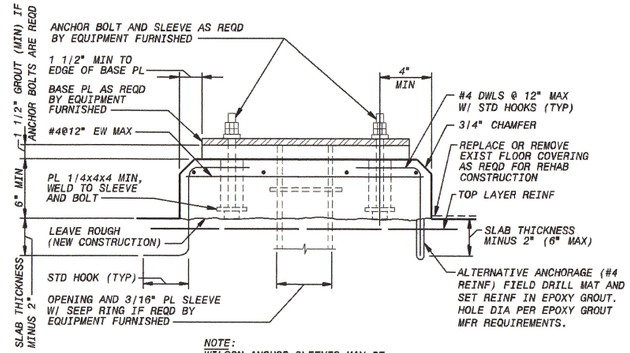

NOTE:
WILSON ANCHOR SLEEVES MAY BE SUBSTITUTED FOR STEEL PIPE SLEEVES

EQUIPMENT BASE (D)
NO SCALE

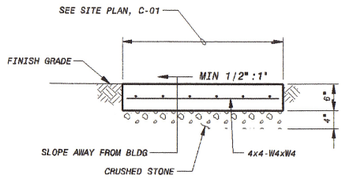

SECTION

CONCRETE PAD DETAIL (E)
NO SCALE

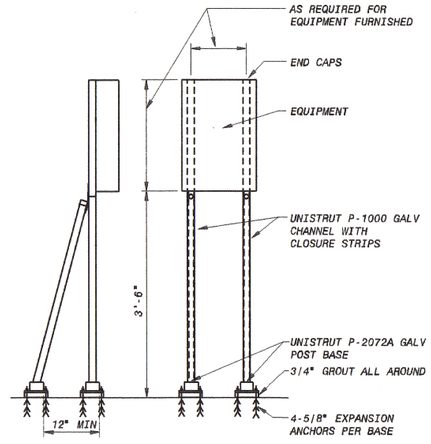

CHEMICAL TRUCK UNLOADING PANELS INSTALLATION DETAIL (A)
NO SCALE

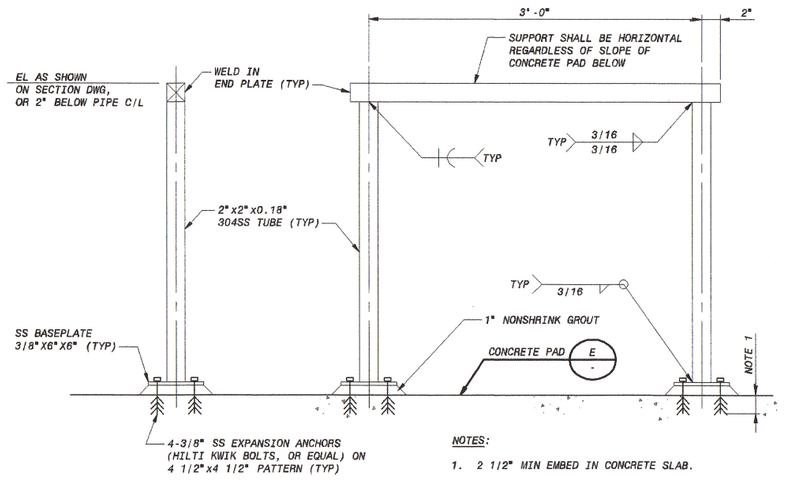

NOTES:
1. 2 1/2" MIN EMBED IN CONCRETE SLAB.

TYPICAL TRUCK HOSE SUPPORT (B)
1 1/2" = 1'-0"

0	MAK	MBS	PJD
	BY	CK	APP

12/09/15 — ISSUED FOR CONSTRUCTION — MG

DATE — REVISIONS AND RECORD OF ISSUE

50.3070 - Mechanical Process Drawings

M-30-508.dwg

SAVED: SCH42738, 8/14/2015 10:56:16 AM

PLOTTED:

USER: MDF49353

XREF1:

XREF2:

XREF3:

XREF4:

DWG VER: 1000

BLACK & VEATCH
Building a world of difference.®
Black & Veatch Corporation
Virginia Beach, VA.

BEDFORD REGIONAL WATER AUTHORITY
SMITH MOUNTAIN LAKE WTP &
RAW WATER PUMPING STATION / INTAKE

MECHANICAL DETAILS

DESIGNED: MBS
DETAILED: MAK
CHECKED: MBS
APPROVED: PJD
DATE: 12/09/15

0 1/2 1
IF THIS BAR DOES NOT MEASURE 1" THEN DRAWING IS NOT TO FULL SCALE

PROJECT NO.
182262

M-30-508
SHEET
OF

ISSUED FOR CONSTRUCTION

FD7000
D7000

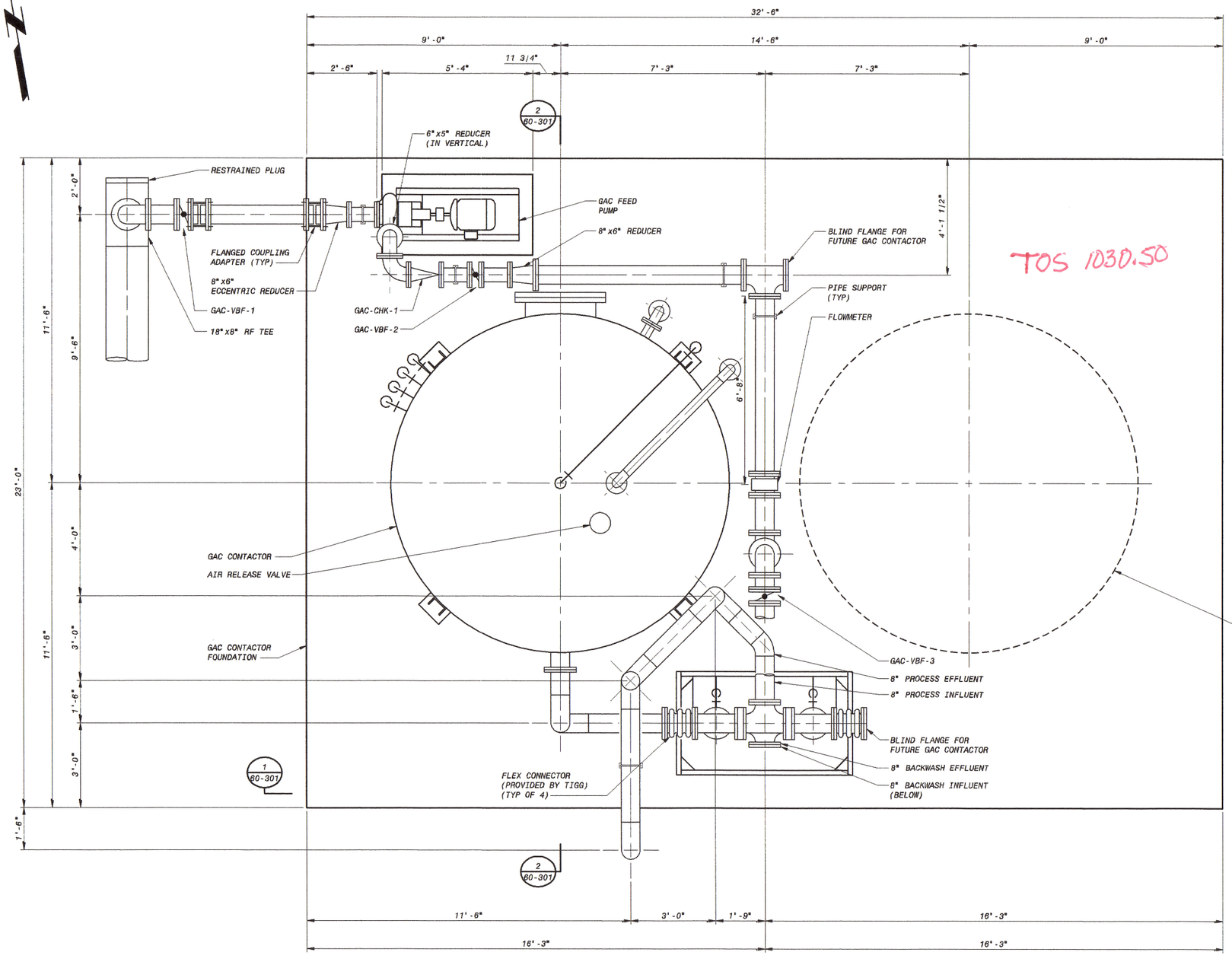

GAC CONTACTOR AND PUMP AREA - PLAN
1/2" = 1'-0"

12" 6" 0 1' 2' 3' 4' 5'
1/2"=1'-0"

TOS 1030.50

RFI 47+51

ISSUED FOR CONSTRUCTION

NO.	BY	CK	APP
0	MAK	MBS	PJD

12/17/15 ISSUED FOR CONSTRUCTION

DATE REVISIONS AND RECORD OF ISSUE

50.3070 - Mechanical Process Drawings

M-60-101.dwg

SAVED: KOE49353, 12/8/2015 9:45:40 AM

PLOTTED:

USER: KOE49353

DWG VER: 1001

XREF1:

XREF2:

XREF3:

XREF4:

COMMONWEALTH OF VIRGINIA PAUL J. DELPHOS REGISTERED PROFESSIONAL ENGINEER

BLACK & VEATCH
Building a world of difference.
Black & Veatch Corporation
Virginia Beach, VA

BEDFORD REGIONAL WATER AUTHORITY
SMITH MOUNTAIN LAKE WTP &
RAW WATER PUMPING STATION / INTAKE

MECHANICAL
GAC CONTACTOR AND PUMP AREA
PLAN

DESIGNED: MBS
DETAILED: MAK
CHECKED: MBS
APPROVED: PJD
DATE: 12-17-15

0 1/2 1
IF THIS BAR DOES NOT MEASURE 1" THEN DRAWING IS NOT TO FULL SCALE

PROJECT NO.
182262

M-60-101
SHEET
OF

FD7000
D7000

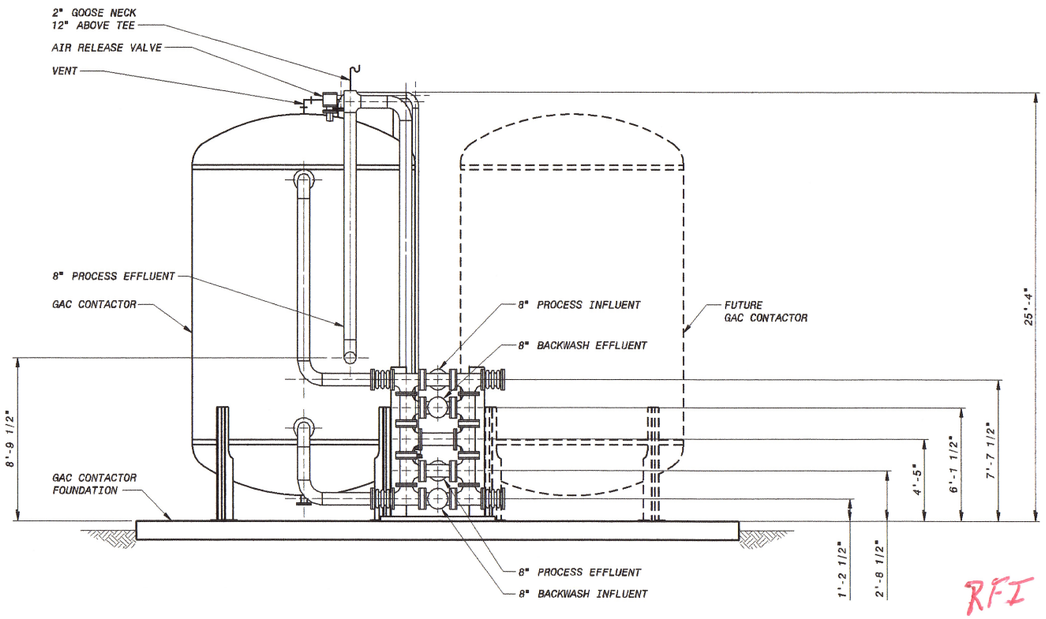

SECTION 1 / 60-101
1/4" = 1'-0"

RFI 47+51

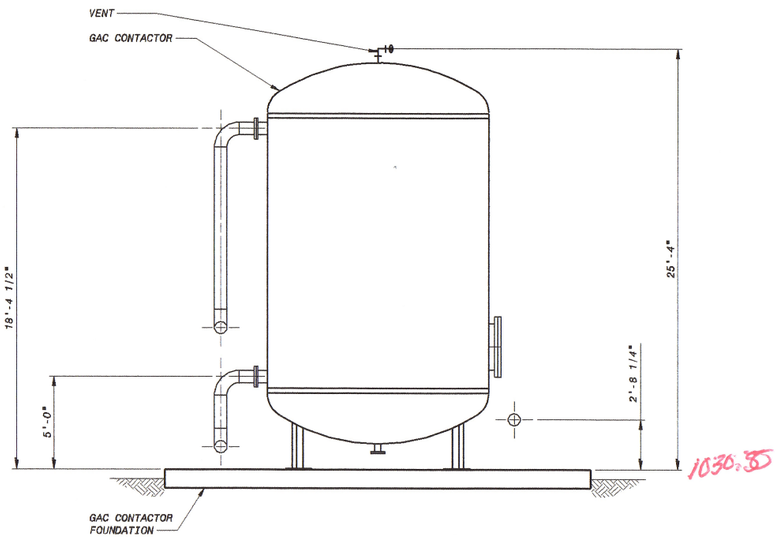

SECTION 2 / 60-101
1/4" = 1'-0"

4' 2' 0 4' 8'
1/4"=1'-0"

ISSUED FOR CONSTRUCTION

NO.	BY	CK	APP'D
0	MAK	MBS	PJD

12/17/15 ISSUED FOR CONSTRUCTION

DATE REVISIONS AND RECORD OF ISSUE

50.3070 - Mechanical Process Drawings

M-60-301.dwg

SAVED: VAN16643, 8/13/2015 4:27:16 PM

PLOTTED:

USER: K0E49353

XREF1:
XREF2:
XREF3:
XREF4:

DMS VER: 1001

COMMONWEALTH OF VIRGINIA
PAUL J. DELPHOS
LICENSED PROFESSIONAL ENGINEER

BLACK & VEATCH
Building a world of difference.
Black & Veatch Corporation
Virginia Beach, VA

BEDFORD REGIONAL WATER AUTHORITY
SMITH MOUNTAIN LAKE WTP &
RAW WATER PUMPING STATION / INTAKE

MECHANICAL
GAC CONTACTOR AND PUMP AREA
SECTIONS

DESIGNED: MBS
DETAILED: MAK
CHECKED: MBS
APPROVED: PJD
DATE: 12-17-15

0 1/2 1
IF THIS BAR DOES NOT MEASURE 1" THEN DRAWING IS NOT TO FULL SCALE

PROJECT NO.
182262

M-60-301
SHEET
OF

ED7000
07000

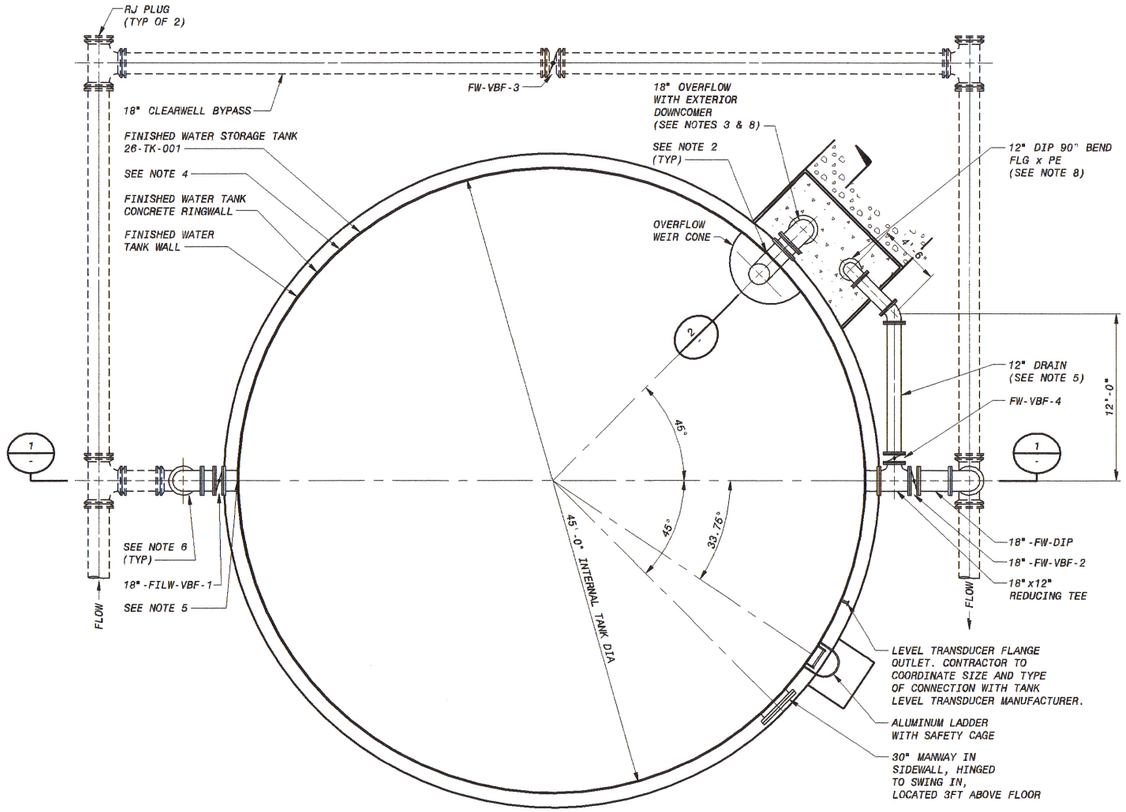

FINISHED WATER STORAGE TANK - SECTIONAL PLAN
3/16" = 1'-0"

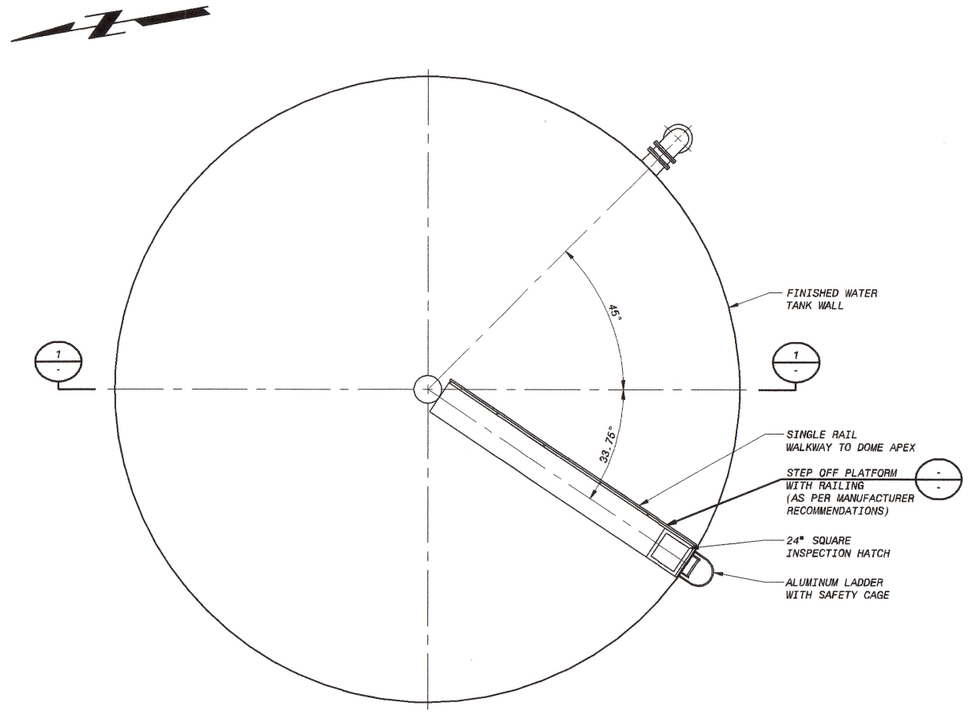

ROOF PLAN
3/16" = 1'-0"

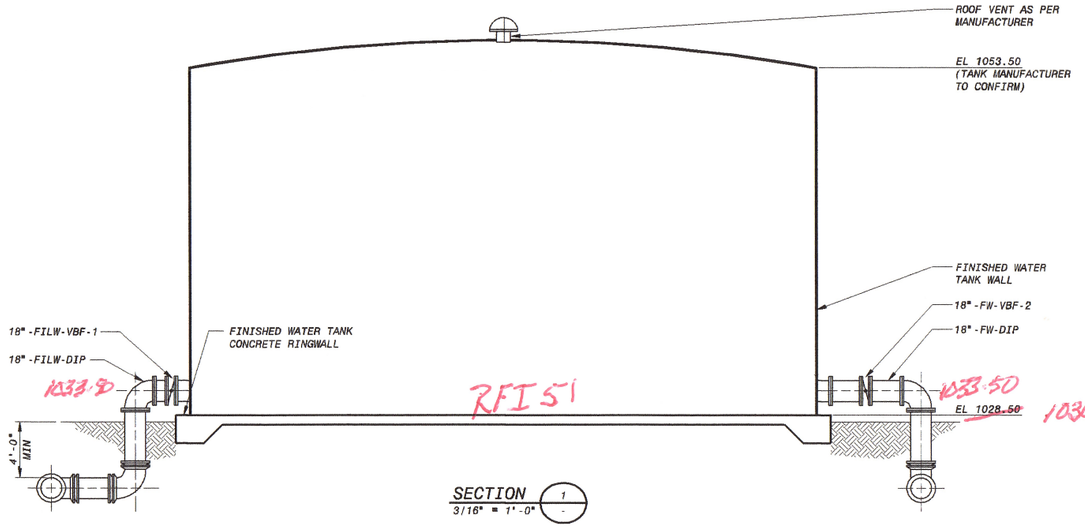

SECTION 1
3/16" = 1'-0"

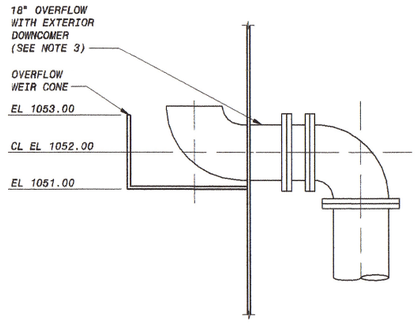

SECTION 2
1/2" = 1'-0"

NOTES:

1. CONCRETE RINGWALL/FOUNDATION SHALL BE DESIGNED BY TANK MANUFACTURER.
2. PLATE REINFORCING AT OUTLETS SHALL BE PER TANK MANUFACTURER'S RECOMMENDATIONS.
3. ALL SUPPORTS ON TANK FOR PIPE AND APPURTENANCES SHALL BE DESIGNED AND FURNISHED BY TANK MANUFACTURER.
4. SIZE AND LOCATION AND NUMBER OF ANCHORS AND MINIMUM EMBEDMENTS SHALL BE DETERMINED BY TANK MANUFACTURER.
5. PIPE COATINGS SYSTEM SHALL MATCH TANK INTERIOR AND EXTERIOR COATING SYSTEMS. ALL EXPOSED PIPE TO BE COATED.
6. CONTRACTOR TO INSTALL FLEXIBLE EXPANSION JOINT AND INSULATING JOINTS PER MANUFACTURER'S RECOMMENDATIONS.
7. TANK MANUFACTURER SHALL PROVIDE INTERIOR BAFFLES FOR A MINIMUM 0.5 BAFFLING FACTOR.
8. TANK DRAIN AND OVERFLOW OUTLETS SHALL BE EQUIPPED WITH ANIMAL / DEBRIS SCREENS AS PER MANUFACTURER'S RECOMMENDATIONS.

6' 4' 2' 0 5' 10' 15'
1/2"=1'-0"

6' 4' 2' 0 5' 10'
3/16"=1'-0"

ISSUED FOR CONSTRUCTION

NO.	BY	CK	APP'D
0	MAK	MBS	PJD

DATE	REVISIONS AND RECORD OF ISSUE
12/17/15	ISSUED FOR CONSTRUCTION

50.3070 - Mechanical Process Drawings
M-80-101.dwg
SAVED: KOE49353, 8/18/2015 1:11:47 PM
PLOTTED:
USER: KOE49353
DWG VER: 1003
XREF1:
XREF2:
XREF3:
XREF4:

COMMONWEALTH OF VIRGINIA
PAUL J. DELPHOS
LICENSED PROFESSIONAL ENGINEER

BLACK & VEATCH
Building a world of difference.
Black & Veatch Corporation
Virginia Beach, VA

BEDFORD REGIONAL WATER AUTHORITY
SMITH MOUNTAIN LAKE WTP &
RAW WATER PUMPING STATION / INTAKE

MECHANICAL
FINISHED WATER STORAGE TANK
PLAN AND SECTION

DESIGNED: MBS
DETAILED: MAK
CHECKED: MBS
APPROVED: PJD
DATE: 12-17-15

0 1/2 1
IF THIS BAR DOES NOT MEASURE 1" THEN DRAWING IS NOT TO FULL SCALE

PROJECT NO.
182262

M-80-101
SHEET
OF

FD7000
D7000

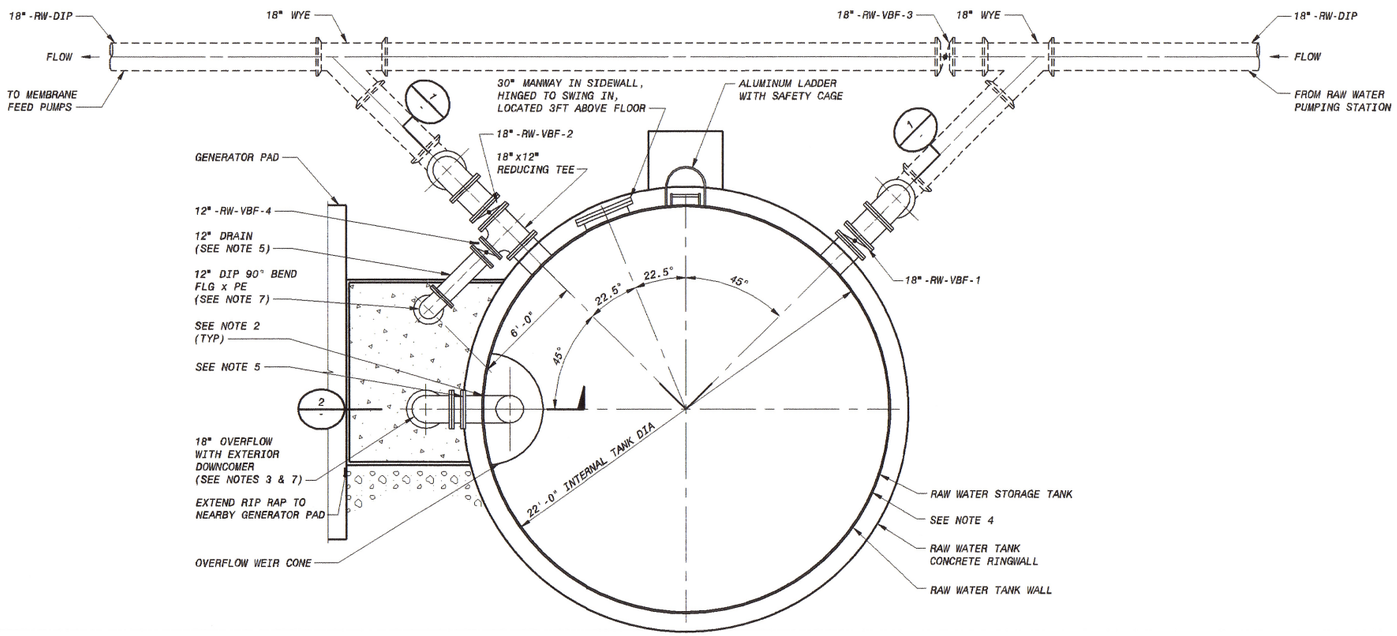

RAW WATER STORAGE TANK - SECTIONAL PLAN
1/4" = 1'-0"

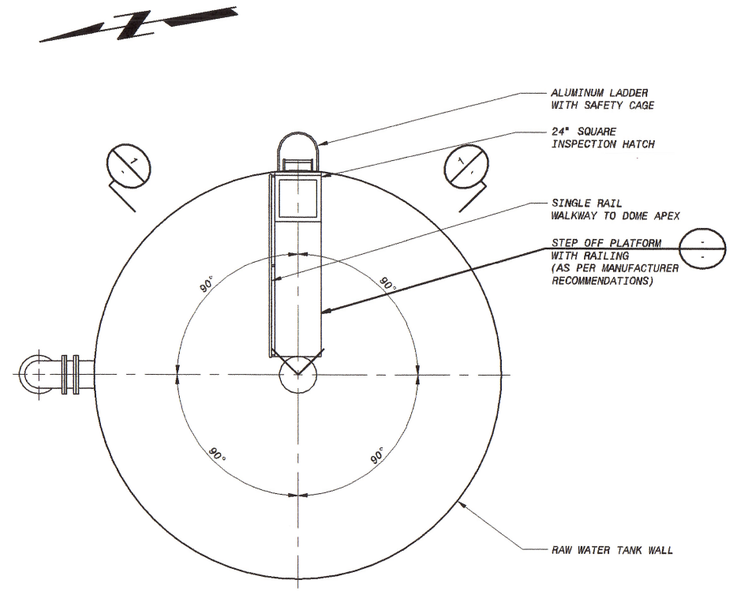

ROOF PLAN
1/4" = 1'-0"

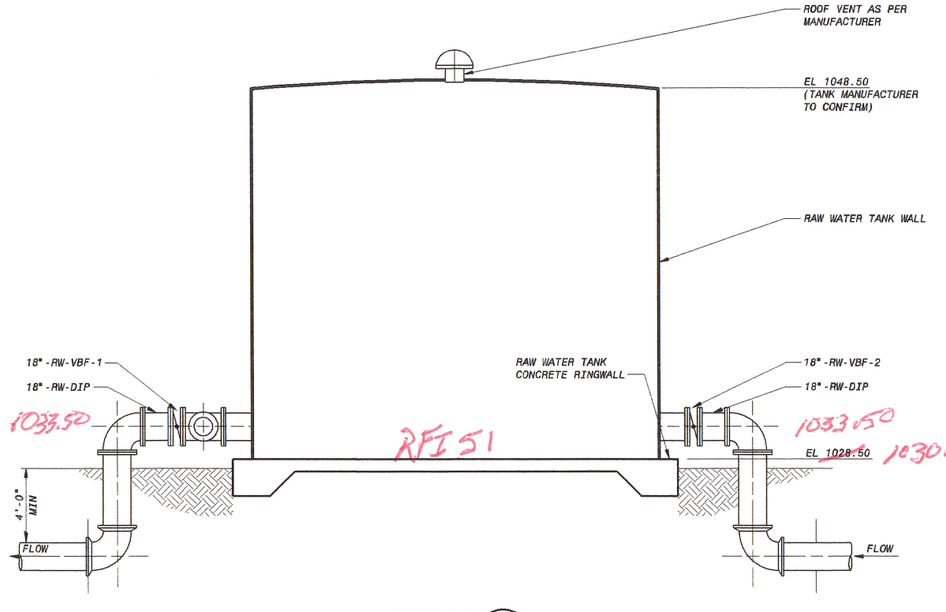

SECTION 1/1
1/4" = 1'-0"

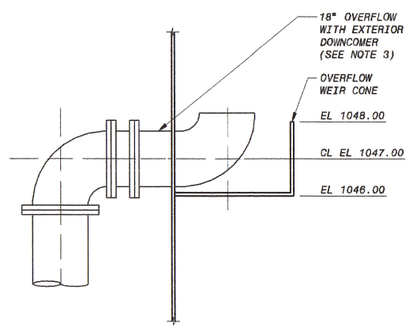

SECTION 2/1
1/2" = 1'-0"

NOTES:

1. CONCRETE RINGWALL/FOUNDATION SHALL BE DESIGNED BY TANK MANUFACTURER.
2. PLATE REINFORCING AT OUTLETS SHALL BE PER TANK MANUFACTURER'S RECOMMENDATIONS.
3. ALL SUPPORTS ON TANK FOR PIPE AND APPURTENANCES SHALL BE DESIGNED AND FURNISHED BY TANK MANUFACTURER.
4. SIZE AND LOCATION AND NUMBER OF ANCHORS AND MINIMUM EMBEDMENTS SHALL BE DETERMINED BY TANK MANUFACTURER.
5. PIPE COATINGS SYSTEM SHALL MATCH TANK INTERIOR AND EXTERIOR COATING SYSTEMS. ALL EXPOSED PIPE TO BE COATED.
6. CONTRACTOR TO INSTALL FLEXIBLE EXPANSION JOINT AND INSULATING JOINTS PER MANUFACTURER'S RECOMMENDATIONS.
7. TANK DRAIN AND OVERFLOW OUTLETS SHALL BE EQUIPPED WITH ANIMAL / DEBRIS SCREENS AS PER MANUFACTURER'S RECOMMENDATIONS.

6' 4' 2' 0 5' 10' 15'
1/2"=1'-0"

4' 2' 0 4' 8'
1/4"=1'-0"

ISSUED FOR CONSTRUCTION

NO.	BY	CK	APP'D
0	MAK	MBS	PJD

12/17/15 ISSUED FOR CONSTRUCTION

DATE REVISIONS AND RECORD OF ISSUE

50.3070 - Mechanical Process Drawings

M-85-101.dwg

SAVED: KOE49353, 3/31/2015 1:42:59 PM

PLOTTED:

USER: KOE49353

XREF1:
XREF2:
XREF3:
XREF4:

DWG VER: 1001

COMMONWEALTH OF VIRGINIA PAUL J. DELPHOS 040.002.1977 REGISTERED PROFESSIONAL ENGINEER

BLACK & VEATCH
Building a world of difference:
Black & Veatch Corporation
Virginia Beach, VA

BEDFORD REGIONAL WATER AUTHORITY
SMITH MOUNTAIN LAKE WTP &
RAW WATER PUMPING STATION / INTAKE

MECHANICAL
RAW WATER STORAGE TANK
PLAN AND SECTION

DESIGNED: MBS
DETAILED: MAK
CHECKED: MBS
APPROVED: PJD
DATE: 12/17/15

0 1/2 1
IF THIS BAR DOES NOT MEASURE 1" THEN DRAWING IS NOT TO FULL SCALE

PROJECT NO.
182262

M-85-101
SHEET
OF

FD7000
D7000

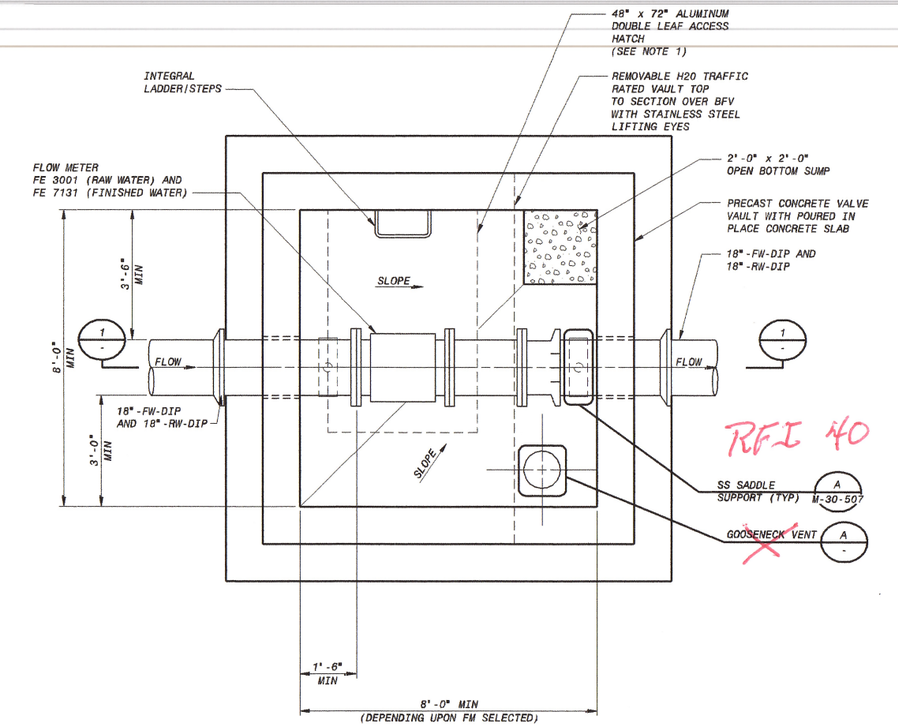

RAW WATER AND FINISHED WATER FLOW METER VAULTS - PLAN

1/2" = 1'-0"

RFI 40

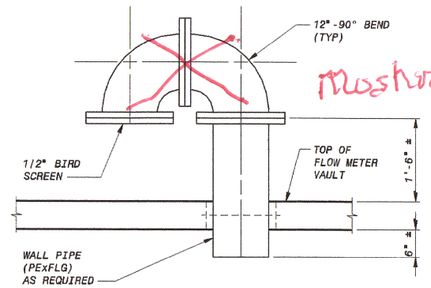

GOOSENECK VENT (A)

NO SCALE

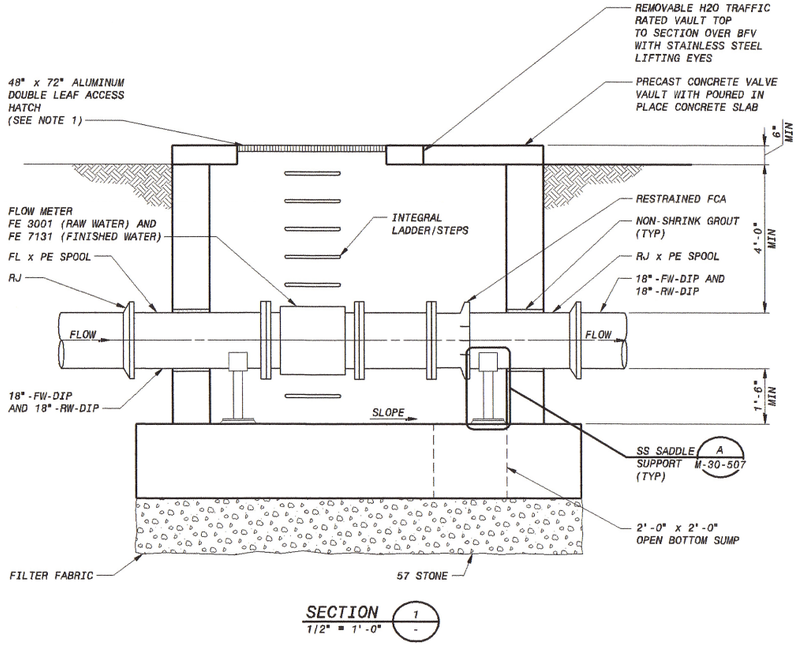

SECTION (1)

1/2" = 1'-0"

NOTE:

1. ALUMINUM DOUBLE LEAF ACCESS HATCH SHALL BE BILCO MODEL JD-3AL H20 (OR APPROVED EQUAL) WITH ALL 316 STAINLESS STEEL HARDWARE, SLAM LOCK, SAFETY WET AND RECESSED PADLOCK HASP. HATCH DRAIN TO BE PIPED TO VAULT SUMP.

12" 6" 0 1' 2' 3' 4' 5'

1/2"=1'-0"

ISSUED FOR CONSTRUCTION

NO	BY	CK	APP
0	MAK	MBS	PJD

12/17/15 ISSUED FOR CONSTRUCTION

DATE REVISIONS AND RECORD OF ISSUE

50.3070 - Mechanical Process Drawings

M-90-101.dwg

SAVED: VAN16943, 8/13/2015 3:57:47 PM

PLOTTED:

USER: KOE49353

DWG VER: 1001

XREF1:

XREF2:

XREF3:

XREF4:

COMMONWEALTH OF VIRGINIA PAUL J. DELPHOS 020-402-1 PROFESSIONAL ENGINEER

BLACK & VEATCH Building a world of difference.

Black & Veatch Corporation Virginia Beach, VA

BEDFORD REGIONAL WATER AUTHORITY
SMITH MOUNTAIN LAKE WTP &
RAW WATER PUMPING STATION / INTAKE

MECHANICAL
FLOW METER VAULT
PLAN, SECTION AND DETAILS

DESIGNED: MBS
DETAILED: MAK
CHECKED: MBS
APPROVED: PJD
DATE: 12-17-15

0 1/2 1

IF THIS BAR DOES NOT MEASURE 1" THEN DRAWING IS NOT TO FULL SCALE

PROJECT NO. 182262

M-90-101
SHEET
OF

FD7000
07000

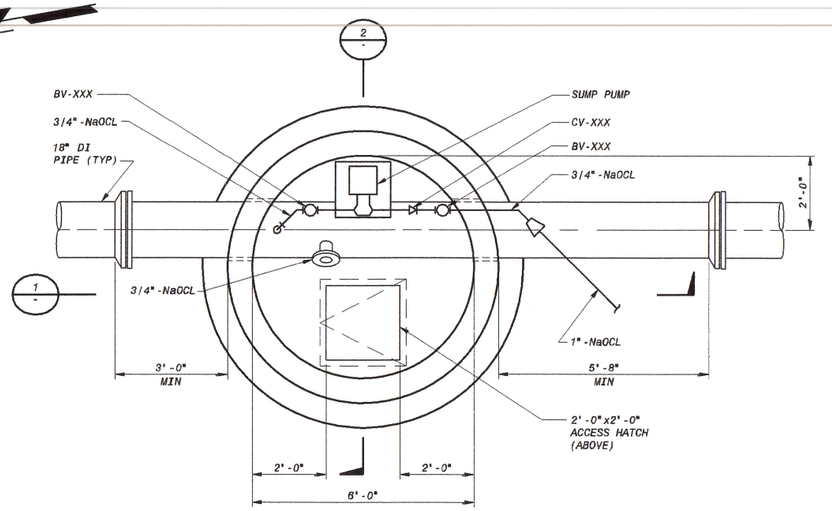

CHEMICAL INJECTION MANHOLE DETAIL
1/2" = 1'-0"

Tube Sized for Corp Stop

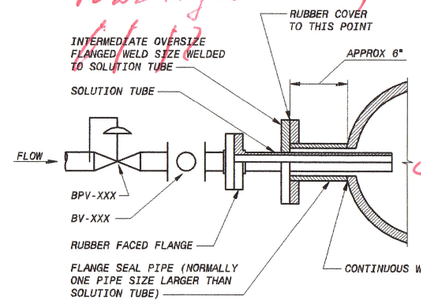

Corp Stop used in conjunction with NaOCl Injection Diffuser

FLANGE ADAPTER DETAIL A
NO SCALE

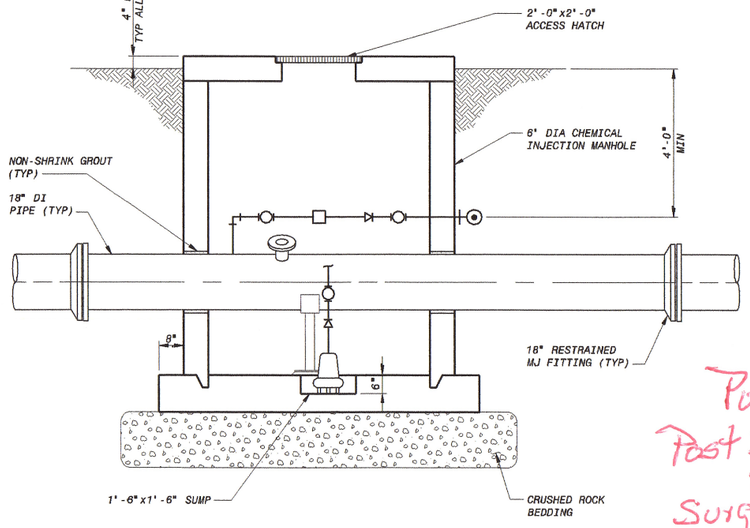

RFI 6
Pump in Post Injection & Surge Valve Vault

SECTION 1
1/2" = 1'-0"

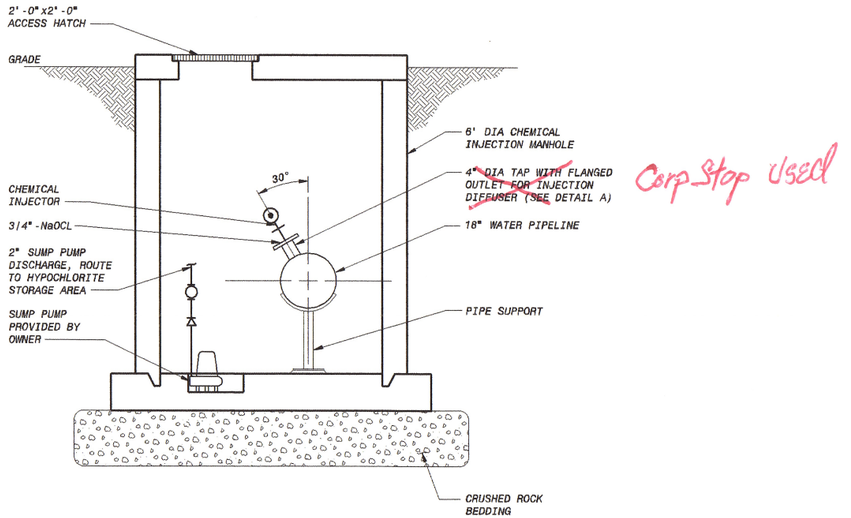

Corp Stop Used

SECTION 2
1/2" = 1'-0"

NOTE:

1. PRECAST CHEMICAL INJECTION MANHOLE SHALL CONFORM TO ASTM C-478, AASHTO M-199, AND VDOT STANDARDS. FLAT TOP SECTION SHALL BE DESIGNED FOR AASHTO HS-20 WHEEL LOADING.

12" 6" 0 1' 2' 3' 4' 5'
1/2"=1'-0"

ISSUED FOR CONSTRUCTION

NO.	BY	CK	APP
0	MAK	MBS	PJD

12/17/15 ISSUED FOR CONSTRUCTION

DATE REVISIONS AND RECORD OF ISSUE

50.3070 - Mechanical Process Drawings

W-95-101.dwg

SAVED: KOE49353, 12/18/2014 3:01:42 PM

PLOTTED:

USER: KOE49353

XREF1:
XREF2:
XREF3:
XREF4:
DMS VER: 1001

COMMONWEALTH OF VIRGINIA
PAUL J. DELPHOS
LICENSED PROFESSIONAL ENGINEER
12/17/15

BLACK & VEATCH
Building a world of difference.
Black & Veatch Corporation
Virginia Beach, VA

BEDFORD REGIONAL WATER AUTHORITY
SMITH MOUNTAIN LAKE WTP &
RAW WATER PUMPING STATION / INTAKE

MECHANICAL
CHEMICAL VALVE VAULT
PLAN, SECTION AND DETAILS

DESIGNED: MBS
DETAILED: MAK
CHECKED: MBS
APPROVED: PJD
DATE: 12-17-15

0 1/2 1
IF THIS BAR DOES NOT MEASURE 1" THEN DRAWING IS NOT TO FULL SCALE

PROJECT NO.
182262

M-95-101
SHEET
OF

FD7060
D7000

NOTES:

1. TRENCH SHALL RUN THE LENGTH OF THE REQUIRED AREA OF RIP RAP SHOWN ON C-20-105.

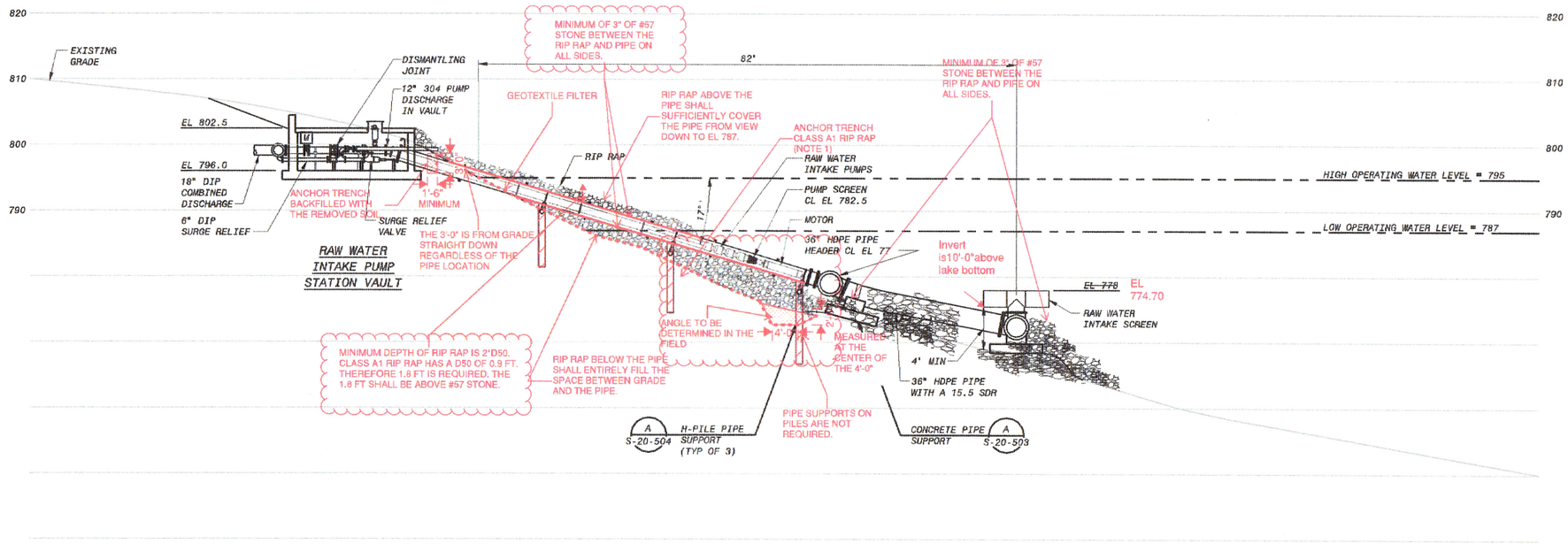

INTAKE STRUCTURE - PROFILE

As Built

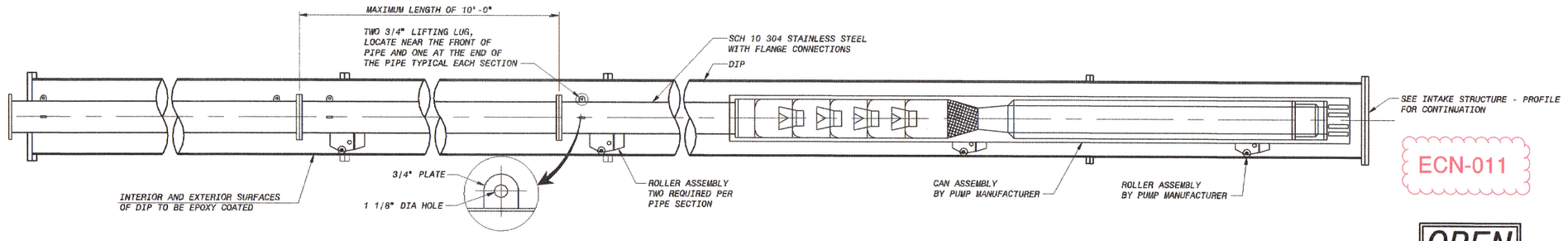

PUMP PROFILE

SCALE 3/8"=1'-0"

ECN-011

OPEN

10' 0 10' 20'
1"=10'

12" 6" 0 1' 2' 3' 4' 5' 6' 7'
3/8"=1'-0"

ISSUED FOR CONSTRUCTION

NO.	BY	CK	APP'D
2	MAK	MRS	PJD
1	MAK	MRS	PJD
0	MAK	MRS	PJD

REVISIONS AND RECORD OF ISSUE

DATE	
01/09/16	GENERAL REVISIONS
01/05/16	GENERAL REVISIONS
12/04/15	ISSUED FOR CONSTRUCTION

50.3130 - Civil Drawings
C-20-301.dwg

XREF1:
XREF2:
XREF3:
XREF4:

SAVED: KOE-49353, 1/8/2016 1:04:19 PM
PLOTTED:
USER: KOE-49353
DWG VER: 1000

BLACK & VEATCH
Building a world of difference.
Black & Veatch Corporation
Virginia Beach, VA

BEDFORD REGIONAL WATER AUTHORITY
SMITH MOUNTAIN LAKE WTP &
RAW WATER PUMPING STATION / INTAKE

CIVIL
INTAKE STRUCTURE
PROFILE - 2 SUBMERSIBLE TURBINE PUMPS

DESIGNED: LRO
DETAILED: MAK
CHECKED: TJS
APPROVED: PJD
DATE: 12/04/15

0 1/2 1
IF THIS BAR DOES NOT MEASURE 1" THEN DRAWING IS NOT TO FULL SCALE

PROJECT NO.
182262

C-20-301
SHEET
OF

FD7000
D7000