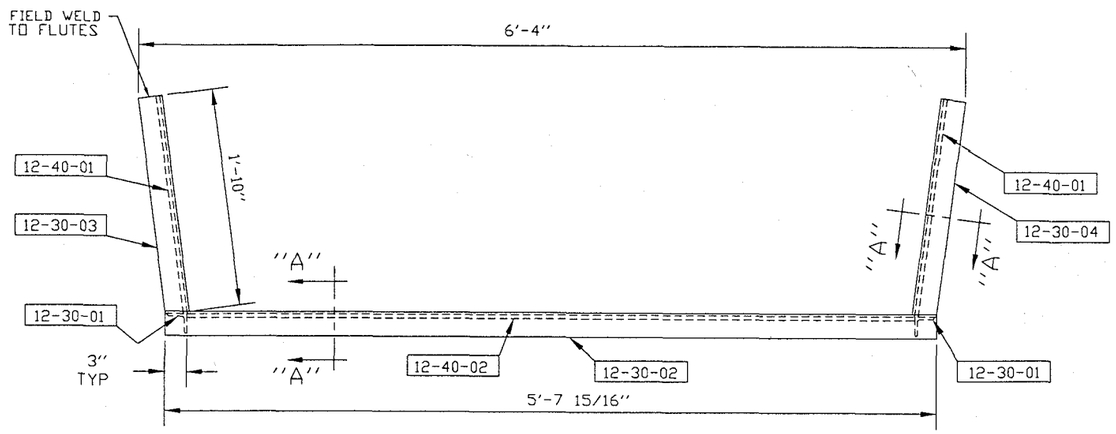

PLAN VIEW
RAILING ASSEMBLY 12-RA-01
FIELD WELD TO GIRDER
@ LADDER ACCESS

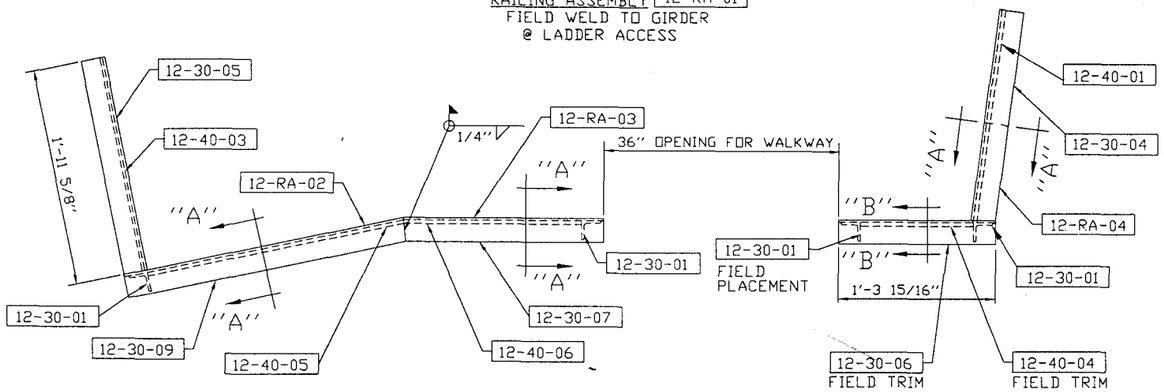

PLAN VIEW 12-RA-02 12-RA-03 12-RA-04
RAILING ASSEMBLY @ WALKWAY
FIELD WELD TO GIRDER
@ LADDER ACCESS

SUB ASS'Y NO.	PART NO.	QTY	DESCRIPTION	MATERIAL REQ'D.	PC WT	TOT WT
12-RA-01		1	GIRDER RAILING ASSEMBLY			112
	12-30-01	2	RAIL POST (PER ASSY)	3"x 3"x 1/4" ANGLE x 3'-5 3/4"	18	
	12-30-02	1	TOP RAIL (PER ASSY)	2 1/2" x 2 1/2" x 1/4" ANGLE x 5'-7 15/16" LG.	24	
	12-30-03	1	TOP RAIL (PER ASSY)	2 1/2" x 2 1/2" x 1/4" ANGLE x 1'-10 1/8" LH	8	
	12-30-04	1	TOP RAIL (PER ASSY)	2 1/2" x 2 1/2" x 1/4" ANGLE x 1'-10 1/8" RH	8	
	12-40-02	1	MID RAIL (PER ASSY)	3" x 3/8" BAR x 5'-1 15/16" LG.	20	
	12-40-01	2	MID RAIL (PER ASSY)	3" x 3/8" BAR x 1'-10 1/8" LG.	8	
12-RA-02		2	GIRDER RAILING ASSEMBLY			60
	12-30-01	1	RAIL POST (PER ASSY)	3"x 3"x 1/4" ANGLE x 3'-5 3/4"	18	
	12-30-05	1	TOP RAIL (PER ASSY)	2 1/2"x 2 1/2" x 1/4" ANGLE x 1'-11 5/8" LG.	9	
	12-30-09	1	TOP RAIL (PER ASSY)	2 1/2"x 2 1/2" x 1/4" ANGLE x 3'-1 1/2" LH	13	
	12-40-03	1	MID RAIL (PER ASSY)	3" x 3/8" BAR x 1'-11 5/8"" LG.	8	
	12-40-05	1	MID RAIL (PER ASSY)	3" x 3/8" BAR x 3'-1 1/2" LG.	12	
12-RA-03		1	GIRDER RAILING ASSEMBLY			32
	12-30-01	1	RAIL POST (PER ASSY)	3"x 3"x 1/4" ANGLE x 3'-5 3/4"	18	
	12-30-07	1	TOP RAIL (PER ASSY)	2 1/2" x 2 1/2" x 1/4" ANGLE x 1'-7 1/2" LG	7	
	12-40-06	1	MID RAIL (PER ASSY)	3" x 3/8" BAR x 1' 7 1/2" LG.	7	
12-RA-04		1	GIRDER RAILING ASSEMBLY			47
	12-30-01	1	RAIL POST (PER ASSY)	3"x 3"x 1/4" ANGLE x 3'-5 3/4"	18	
	12-30-06	1	TOP RAIL (PER ASSY)	2 1/2" x 2 1/2" x 1/4" ANGLE x 1'-3 15/16"	8	
	12-30-04	1	TOP RAIL (PER ASSY)	2 1/2" x 2 1/2" x 1/4" ANGLE x 1'-10 1/8" RH	8	
	12-40-04	1	MID RAIL (PER ASSY)	3" x 3/8" BAR x 1'-3 15/16" LG.	5	
	12-40-01	1	MID RAIL (PER ASSY)	3" x 3/8" BAR x 1'-10 1/8" LG.	8	
12-RA-05		1	GIRDER RAILING ASSEMBLY			63
	12-30-01	1	RAIL POST (PER ASSY)	3"x 3"x 1/4" ANGLE x 3'-5 3/4"	18	
	12-30-05	1	TOP RAIL (PER ASSY)	2 1/2" x 2 1/2" x 1/4" ANGLE x 1'-11 5/8" LG	9	
	12-30-08	1	TOP RAIL (PER ASSY)	2 1/2" x 2 1/2" x 1/4" ANGLE x 3'-1 1/2" RH	16	
	12-40-03	1	MID RAIL (PER ASSY)	3" x 3/8" BAR x 1'-11 5/8" LG.	8	
	12-40-05	1	MID RAIL (PER ASSY)	3" x 3/8" BAR x 3'-1 1/2" LG.	12	
ALL ITEMS LISTED BELOW ARE SHIPPED LOOSE						
	12-30-01	1	RAIL POST	3"x 3"x 3/8" ANGLE x 3'-5 3/4"	18	

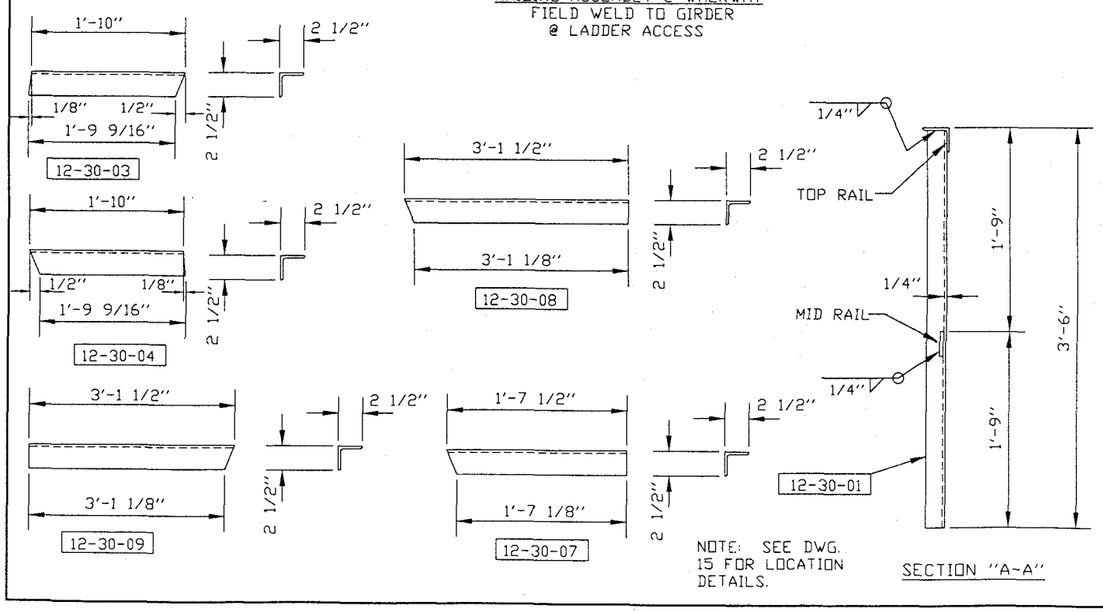

SECTION "A-A"

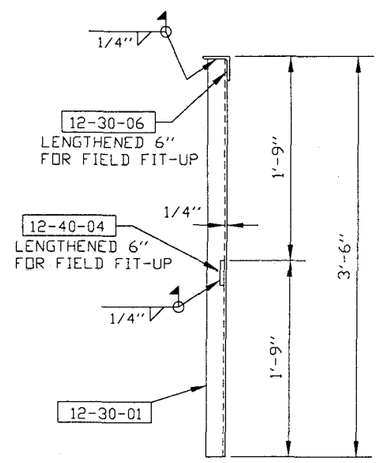

SECTION "B-B"

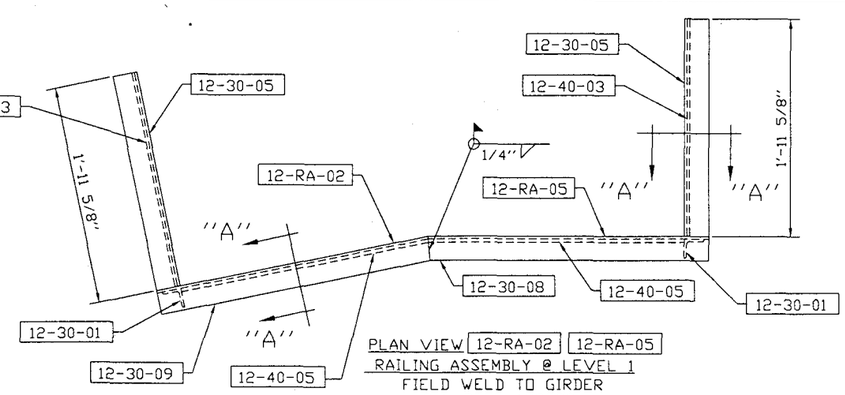

PLAN VIEW 12-RA-02 12-RA-05
RAILING ASSEMBLY @ LEVEL 1
FIELD WELD TO GIRDER
@ LADDER ACCESS

COMMONWEALTH OF VIRGINIA
CHARLES W. BEELER
No. 15566
JUNE 4, 1998
PROFESSIONAL ENGINEER

REV.	BY:	DATE	REMARKS

CALDWELL TANKS, INC.
LOUISVILLE, KY

BOTETOURT COUNTY, VA

BY: BAW/TB
TITLE: GIRDER RAILING
DATE: 5-98
DRAWING NO.: E-4291 12