SUB ASS'Y NO.	PART NO.	QUANTITY	DESCRIPTION	MATERIAL REQ'D.	PC. WT.	TOT. WT.
14-ER-01		24	EXTERIOR COLUMN RING			84
	14-40-02	1	RING	4" x 3/8" ROLLED FLAT BAR x 14'-1 1/8"	72	
	14-40-03	4	BRACE	4" x 3/8" BAR x 7" LG.	3	
14-RA-01		12	STAY ROD ASSEMBLY			105
	14-35-01	1	ROD	1 1/4" ROUND BAR x 20'-8 1/8"	87	
	14-35-02	1	STUB ROD	1 1/4"Ø ROUND BAR X 1'-6" LG	6	
	14-10-12	2	END PLATE	1/2" PLATE (STOCK PART)	6	
	14-60-01	1	TURNBUCKLE	1 1/4" W/6" TAKE-UP		
ITEMS SHIPPED BELOW ARE SHIPPED SEPARATELY						
	14-40-01	12	STAY ROD CLIP	STOCK PART		
	14-86-01	24	STAY ROD BOLT	1 1/4" x 3" H.S. BOLT W/ NUT		

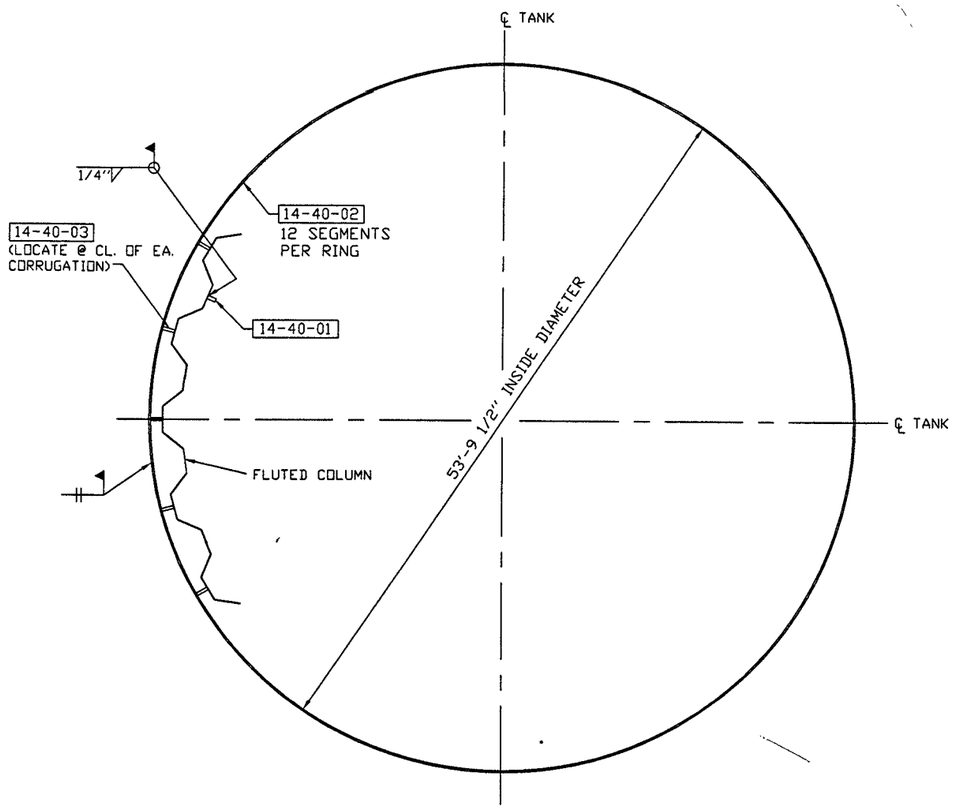

EXTERIOR RING PLAN

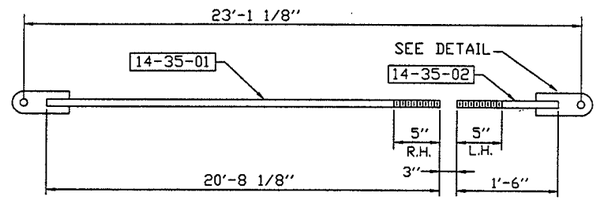

STAY RODS
14-RA-01

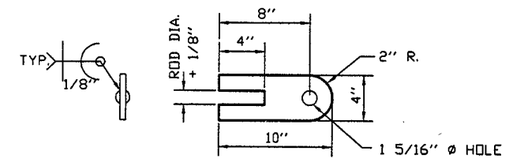

END PLATE DETAIL
14-10-12

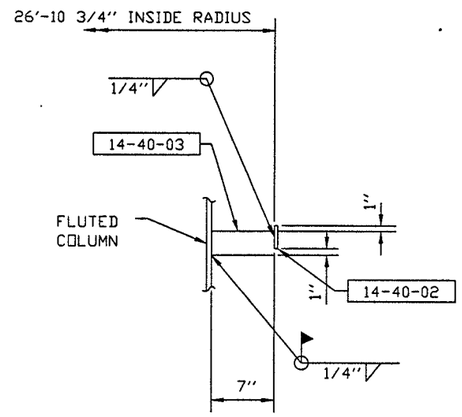

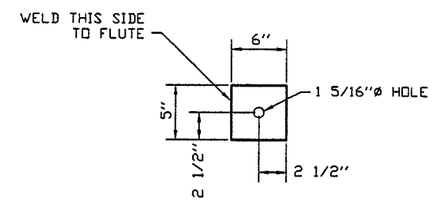

STAY ROD CLIPS
14-40-01

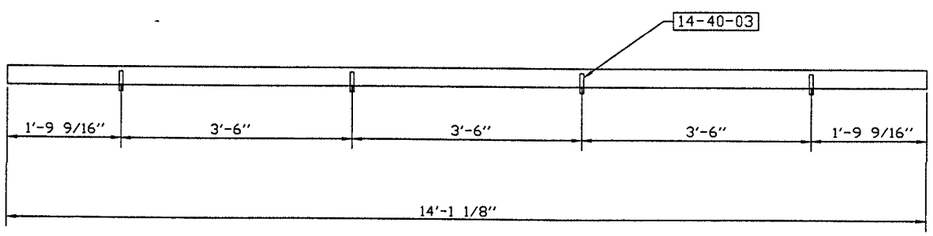

EXTERIOR RING SEGM.
14-40-02

NOTES:

1. SEE DWG. 15 FOR ELEVATION OF EXTERIOR COLUMN RINGS.
2. SEE DWGS. 09 & 15 FOR ELEVATION OF STAY RODS.
3. SEE DWG. 02 FOR ORIENTATION OF STAY RODS.

COMMONWEALTH OF VIRGINIA
CHARLES W. BEELER
No. 15585
JUNE 4, 1998
PROFESSIONAL ENGINEER

REV.	BY:	DATE	REMARKS

CALDWELL TANKS, INC.
LOUISVILLE, KY.

BOTETOURT COUNTY, VA

BY: BAW TB
TITLE: EXTERIOR RINGS & STAY RODS
DATE: 5-98
DRAWING NO.: E-4291 14