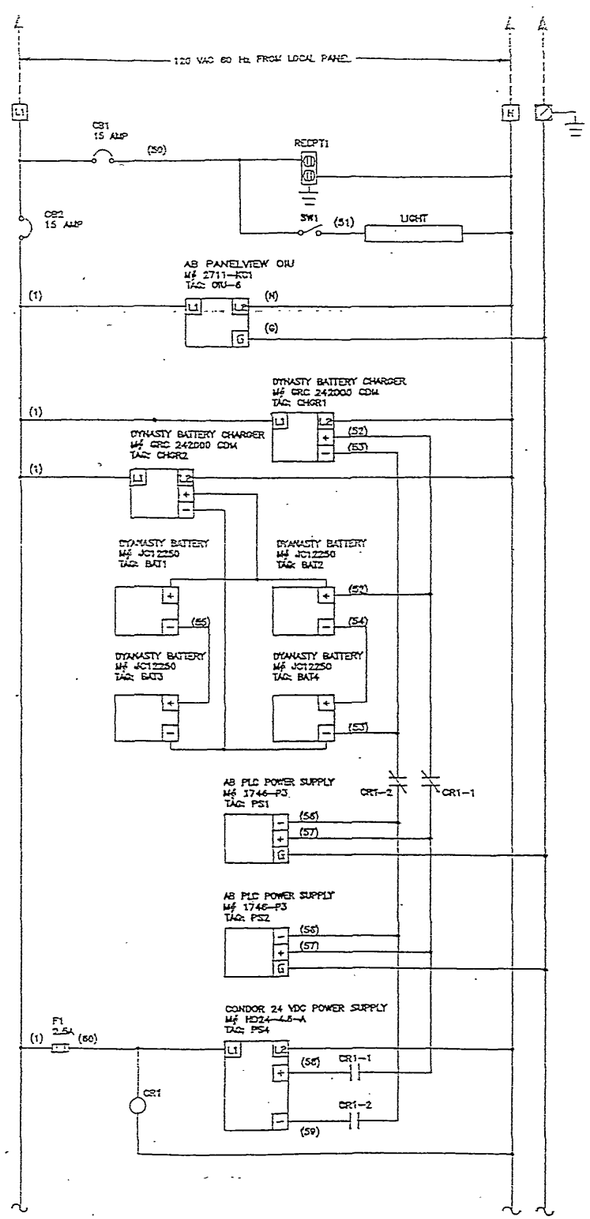

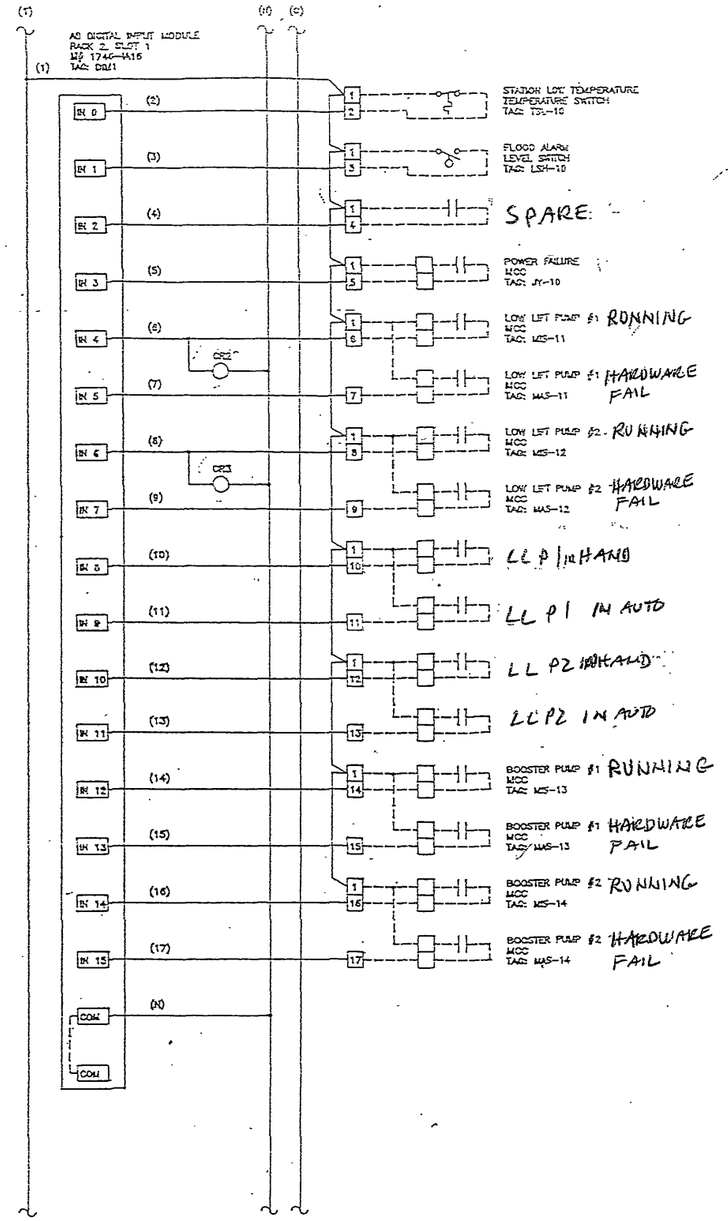

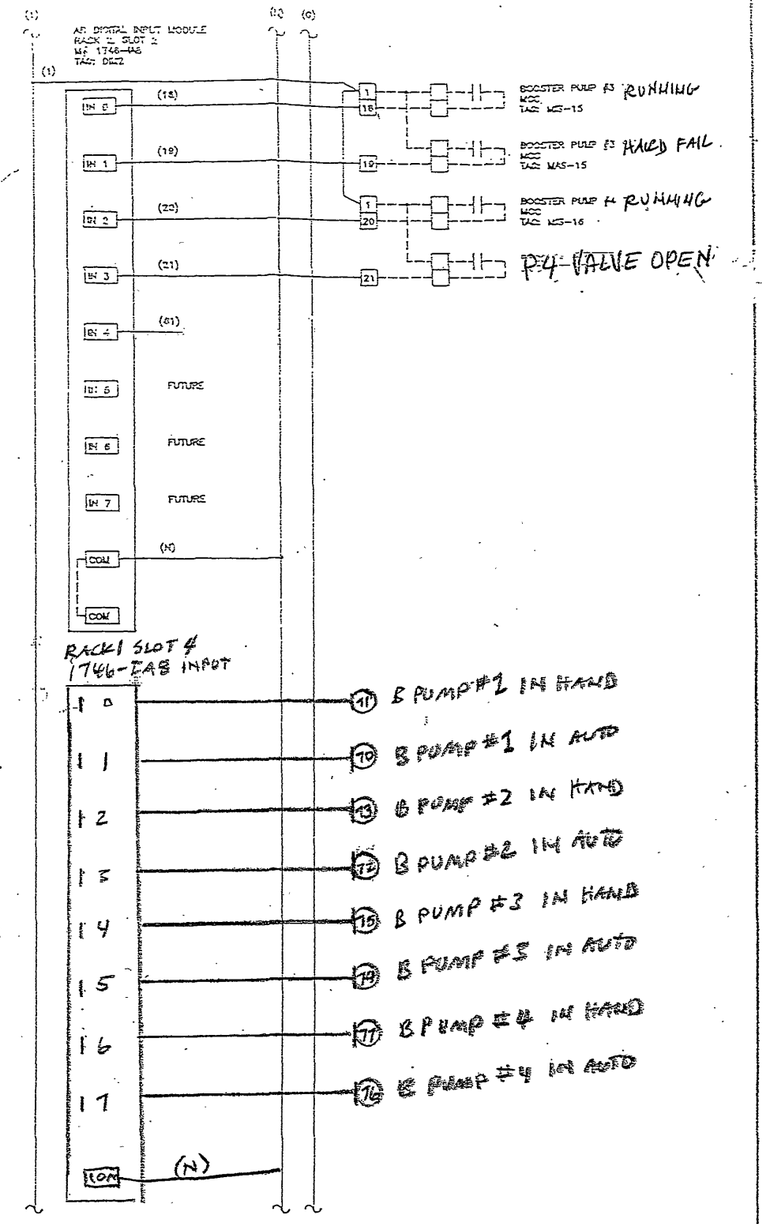

REVISION NOTES
1) REVISED PER MEETING OF 1/26/94.

CITY OF ROANOKE, VA. - CARVINS COVE PH 1			
RTU 7 WIRING DIAGRAM CRYSTAL SPRING PUMP			
SILCONTROLS			
RNW			
RWS	4/26/1993		D461-56