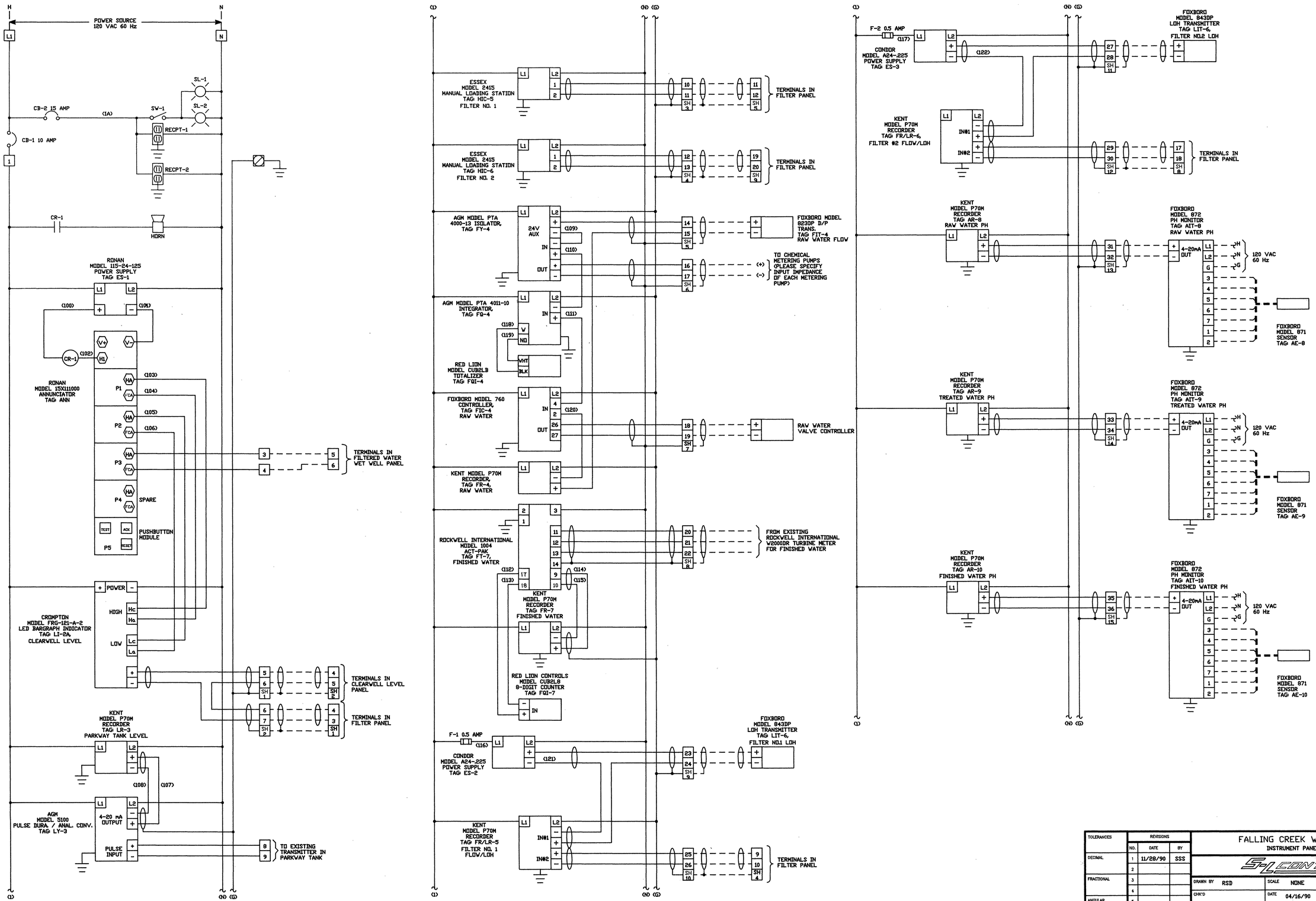

TOLERANCES	REVISIONS		
	NO.	DATE	BY
DECIMAL	1	11/28/90	SSS
	2		
FRACTIONAL	3		
	4		
ANGULAR	5		
	6		

FALLING CREEK WATER PLANT
INSTRUMENT PANEL WIRING

S-L CONTROLS INC.

DRAWN BY RSD	SCALE NONE	MATERIAL
CHK'D	DATE 04/16/90	DRAWING NUMBER SLC376-02
TRACED	APP'D	