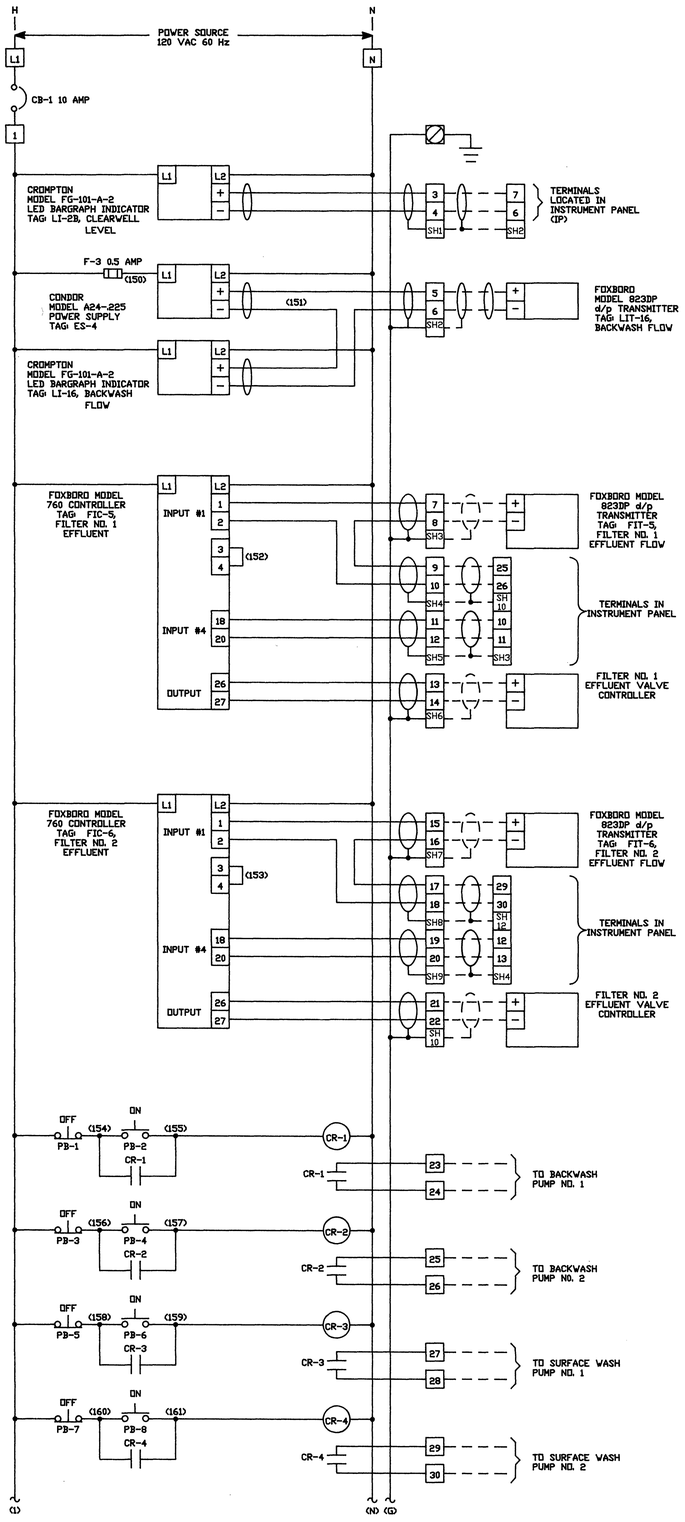

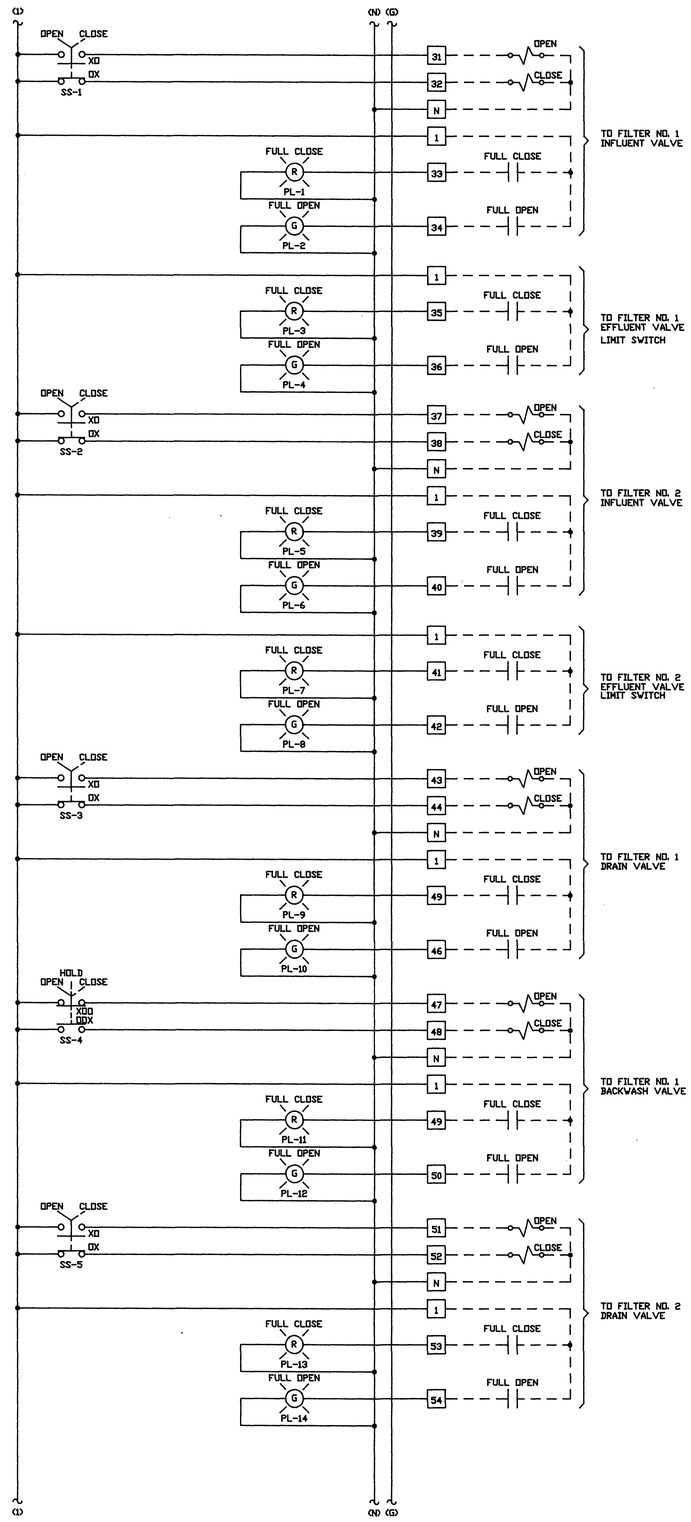

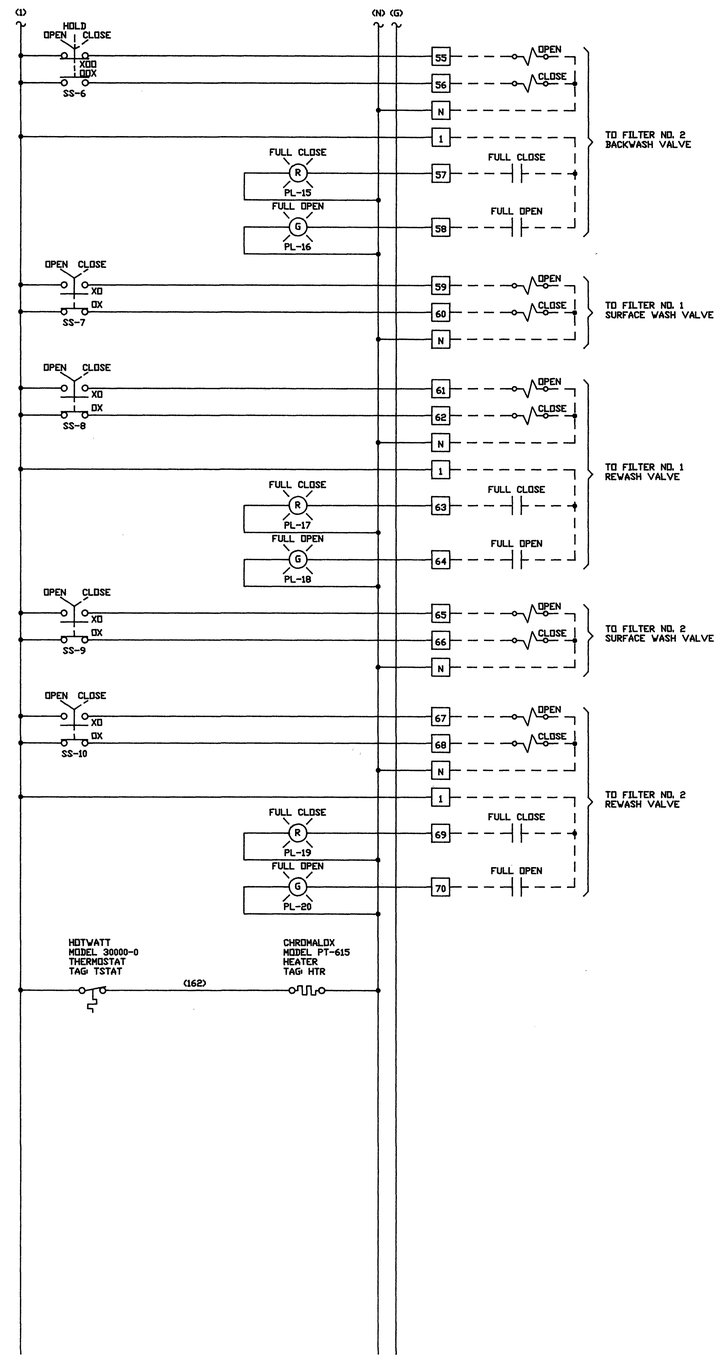

TOLERANCES	REVISIONS		
	NO.	DATE	BY
DECIMAL	1		
	2		
FRACTIONAL	3		
	4		
ANGULAR	5		
	6		

FALLING CREEK WATER PLANT
FILTER PANEL WIRING

S-L CONTROLS INC.

DRAWN BY	RSD	SCALE	NONE	MATERIAL
CHK'D	RWS	DATE	11-28-90	DRAWING NUMBER
TRACED		APP'D		SL376-05