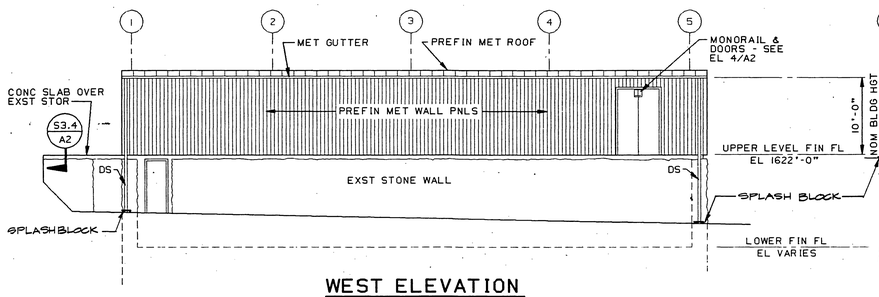

WEST ELEVATION
SCALE: 1/8" = 1'-0"

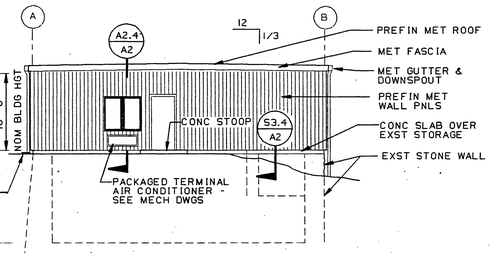

NORTH ELEVATION
SCALE: 1/8" = 1'-0"

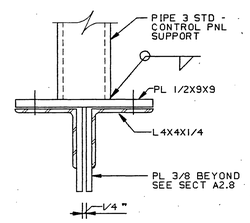

SECTION
SCALE: 3" = 1'-0" — A2.7 / A1

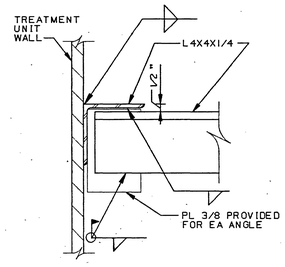

SECTION
SCALE: 3" = 1'-0" — A2.8 / A1

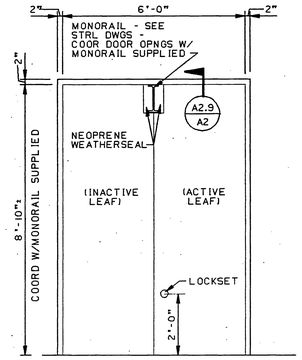

ELEVATION
SCALE: 1/2" = 1'-0" — 4 / A2

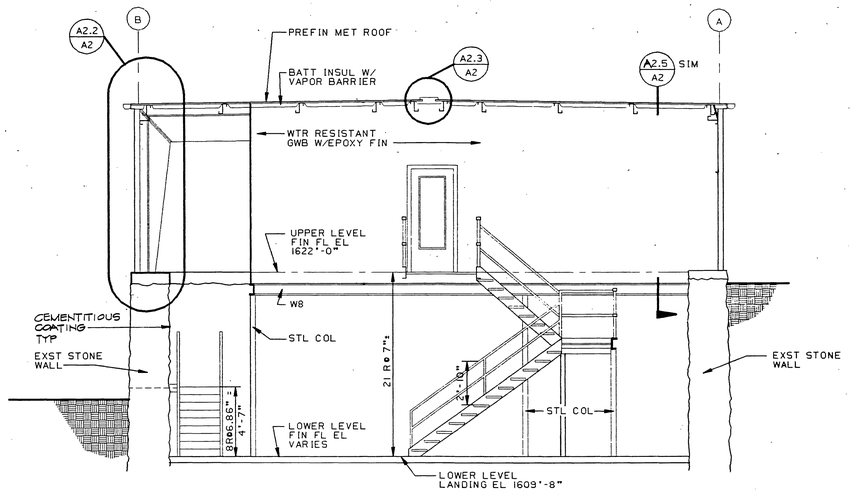

BUILDING SECTION
SCALE: 1/4" = 1'-0" — A2.1 / A1

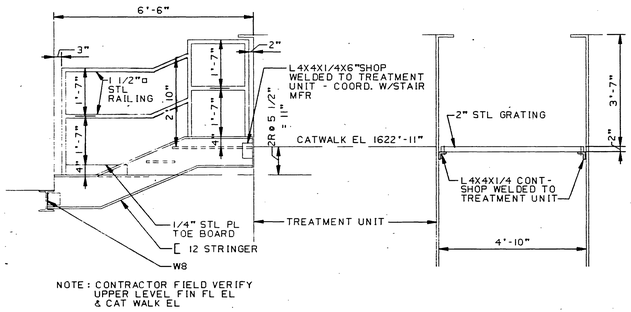

NOTE: CONTRACTOR FIELD VERIFY UPPER LEVEL FIN FL EL & CAT WALK EL

ELEVATION
SCALE: 1/2" = 1'-0" — 1 / A1

SECTION
SCALE: 1/2" = 1'-0" — A2.6 / A1

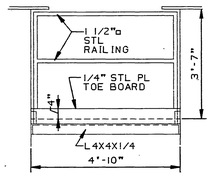

ELEVATION
SCALE: 1/2" = 1'-0" — 2 / A1

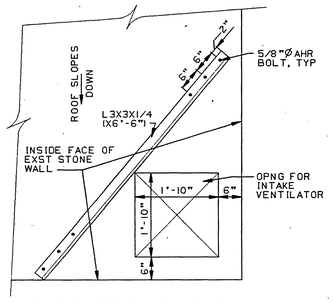

PART REFL CLG PLAN - CHLORINE BUILDING
SCALE: 3/4" = 1'-0"

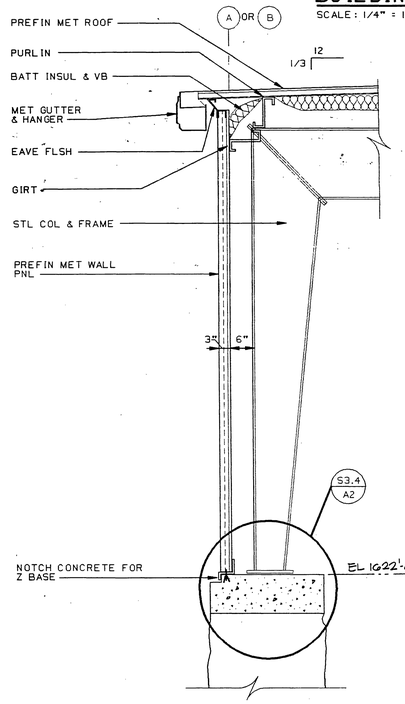

WALL SECTION
SCALE: 3/4" = 1'-0" — A2.2 / A1 A2

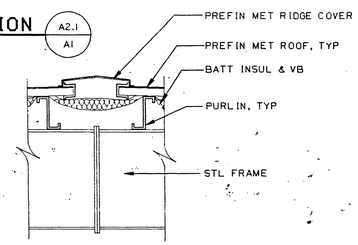

DETAIL
SCALE: 3/4" = 1'-0" — A2.3 / A1 A2

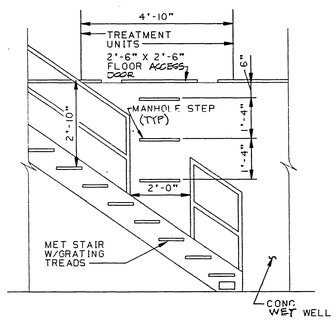

ELEVATION
SCALE: 1/2" = 1'-0" — 3 / A2

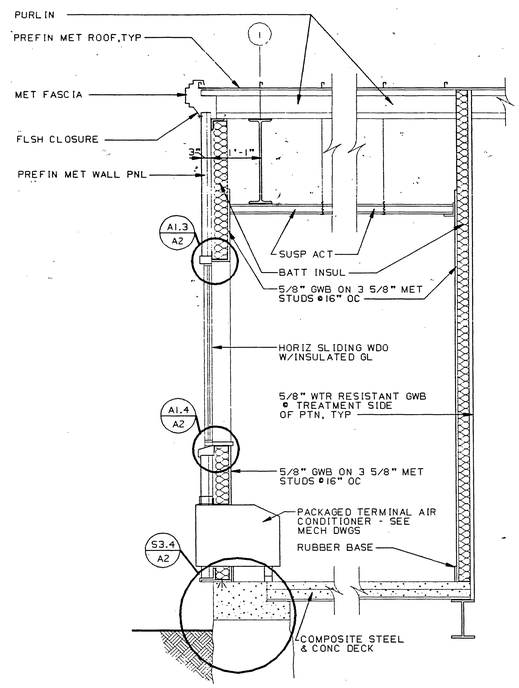

WALL SECTION
SCALE: 3/4" = 1'-0" — A2.4 / A1 A2

WALL SECTION
SCALE: 3/4" = 1'-0" — A2.5 / A1 A2

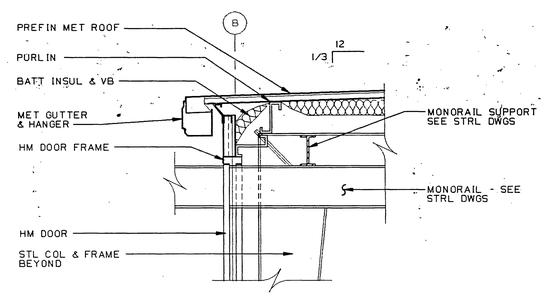

SECTION
SCALE: 3/4" = 1'-0" — A2.9 / A2

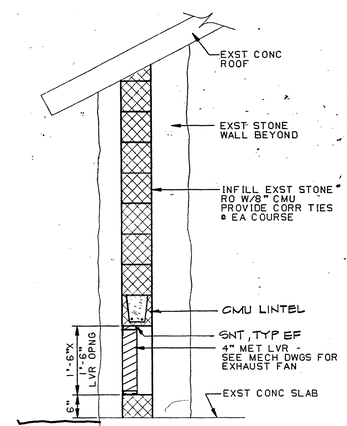

SECTION
SCALE: 3/4" = 1'-0" — A2.10 / A3

REVISION	DATE	DESCRIPTION	BY	APP
	8/93	RECORD DRAWING		

DESIGNED	DAP
DRAWN	LAP
CHECKED	RJB
APPROVED	FFH
SUBMITTED	RJC

FALLING CREEK WATER PLANT
CITY OF ROANOKE, VIRGINIA

FILTER BUILDING - ELEVATIONS, SECTIONS AND DETAILS

COMMONWEALTH OF VIRGINIA — FLETCHER F. RUSH — CERTIFICATE No. 1484 — CERTIFIED ARCHITECT

HAYES, SEAY, MATTERN & MATTERN
ARCHITECTS - ENGINEERS - PLANNERS
ROANOKE, VIRGINIA

SCALE: AS NOTED | COMM. NO. 4296
DATE: 30 MAY 1989 | SHEET: A2

051689 REV. B DRAW I 4X LAP

4296.FALLCRK.A2