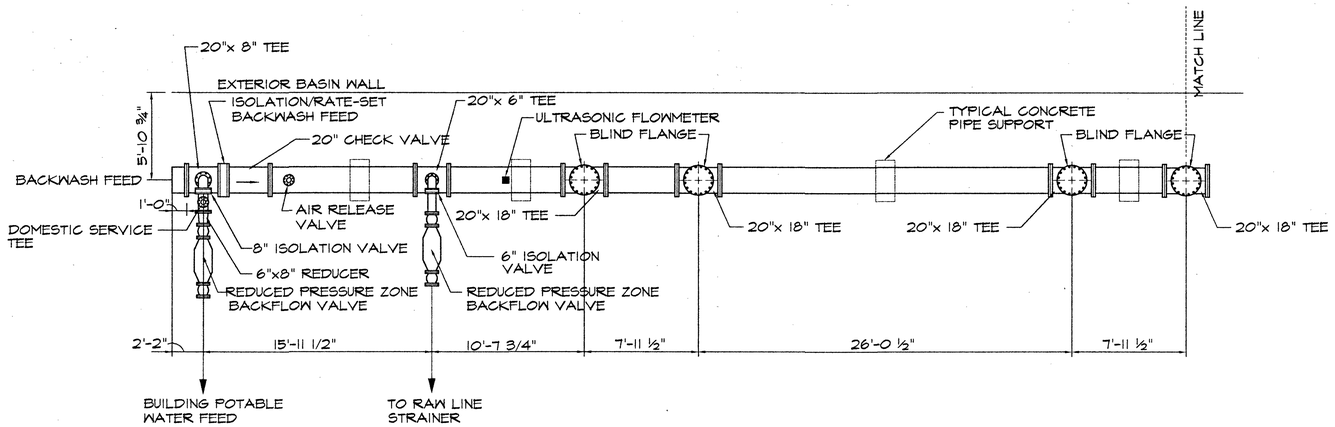

BACKWASH FEED PIPING PLAN

SCALE 1" = 5'-0"

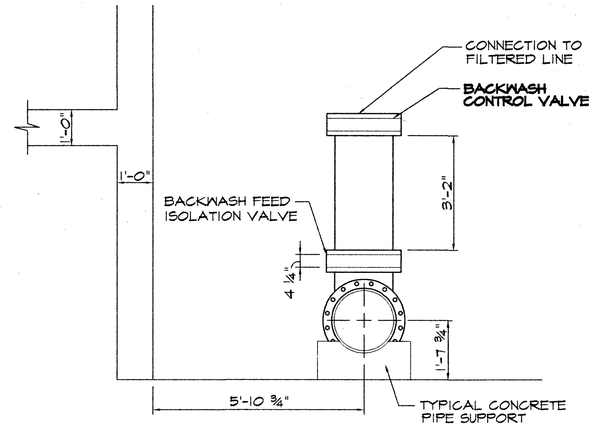

BACKWASH FEED SECTION

T7.2 / T7

SCALE 1" = 2'-0"

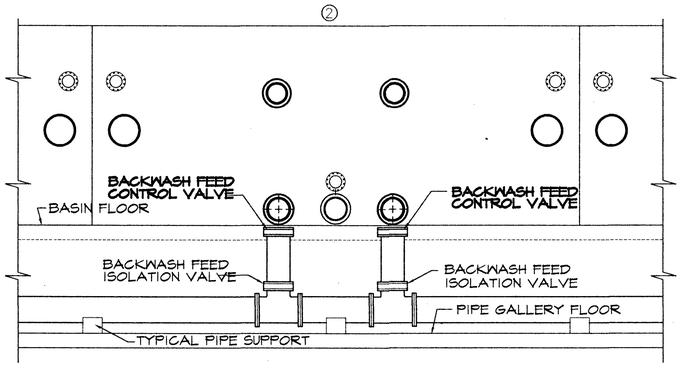

BASIN #2 - BACKWASH FEED PIPING ELEVATION

T7.1 / T7

SCALE 1" = 5'-0"

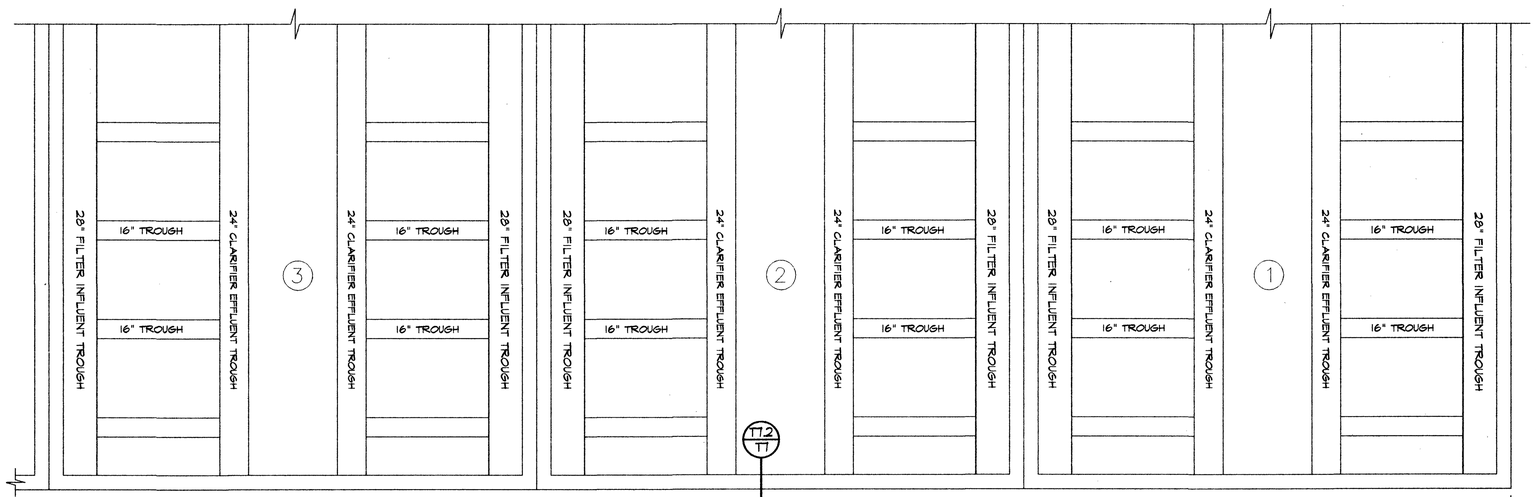

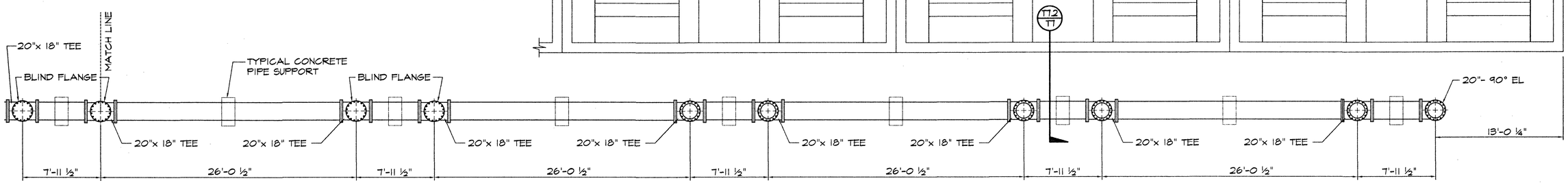

BACKWASH FEED PIPING PLAN

SCALE 1" = 5'-0"

T7.1 / T7

NOTES

1. ALL BACKWASH FEED PIPING AND FITTINGS TO BE 304 STAINLESS STEEL RATED AT 200 PSI
2. ALL CONTROL VALVES TO BE SUPPLIED BY OTHERS
3. **CONTROL VALVE: MOTORIZED MODULATING BUTTERFLY VALVE WITH HAND OPERATOR**

ROANOKE COUNTY WATER TREATMENT FACILITY

COMMONWEALTH OF VIRGINIA — GARY LEE ROBERTSON — No. 014508 — PROFESSIONAL ENGINEER

COMMONWEALTH OF VIRGINIA — CLIFFORD D. CRAIG — No. 022750 — PROFESSIONAL ENGINEER

BACKWASH FEED PIPING DIAGRAM

DESIGN ENGINEER: CLIFFORD D. CRAIG	COMMISSION NUMBER: 1913
RCUD NUMBER: WTF-1	DATE: 9 SEPT. 1994

T7

ROANOKE COUNTY UTILITY DEPARTMENT