Barry Montgomery -

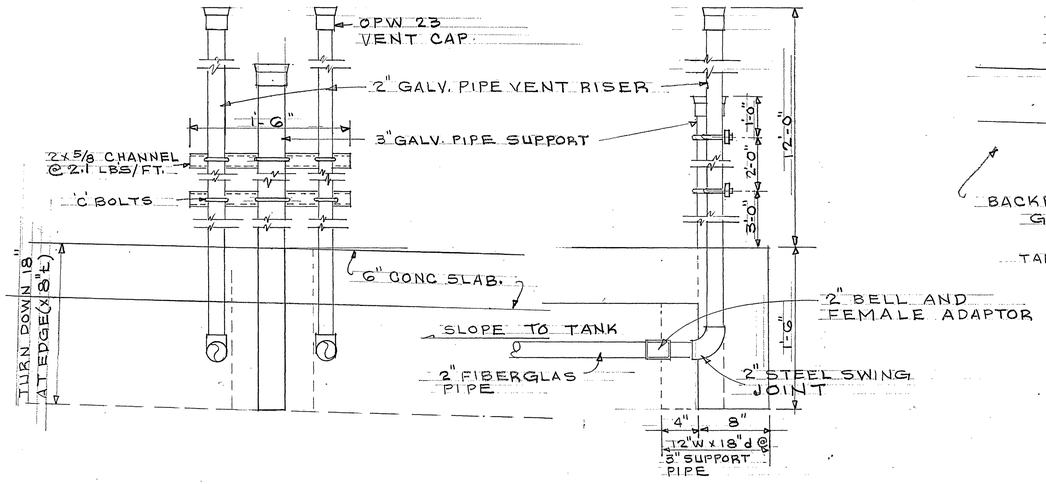

DETAIL OF TANK VENTS

NOT TO SCALE.

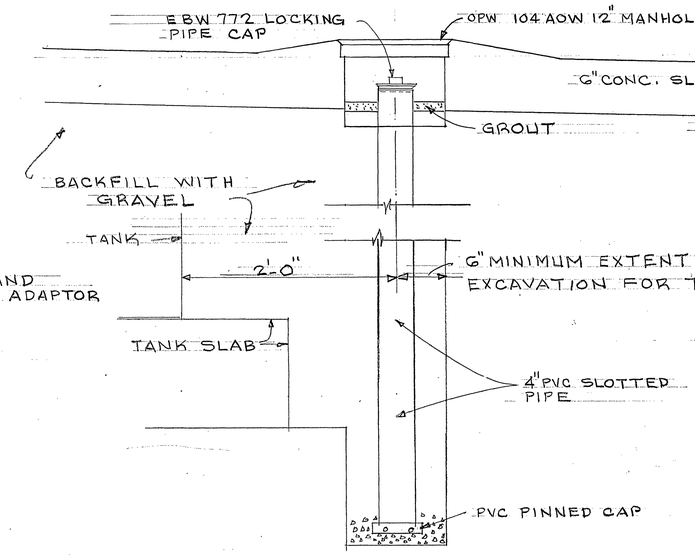

SECTION @ OBSERVATION WELL.

NOT TO SCALE.

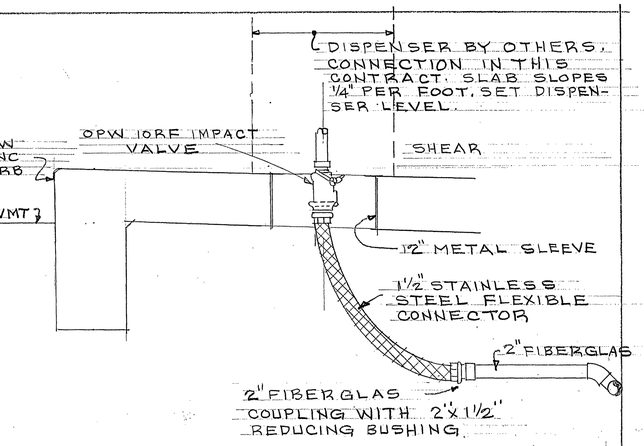

PIPING AT DISPENSER.

NOT TO SCALE

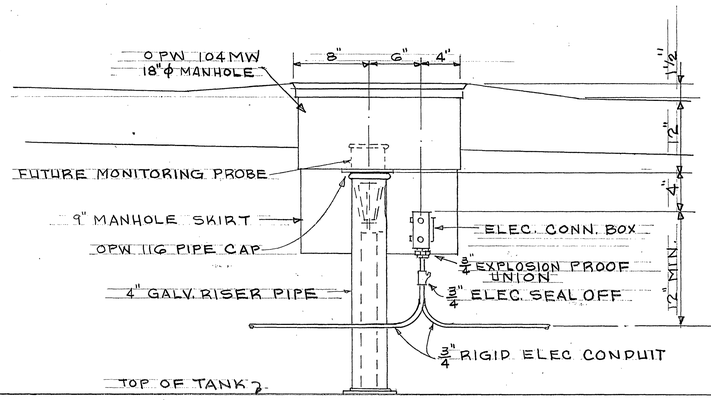

MONITOR RISER DETAIL

NOT TO SCALE

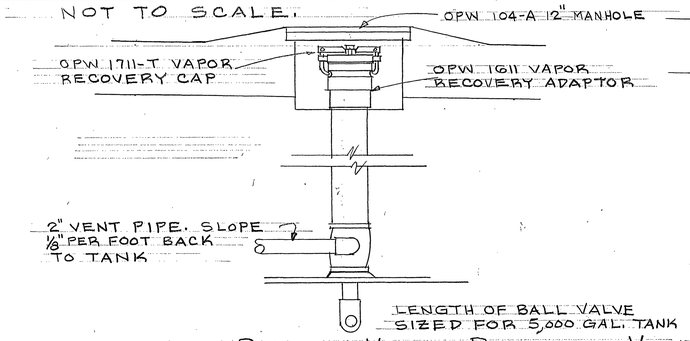

DETAIL-VAPOR RECOVERY VENT.

NOT TO SCALE.

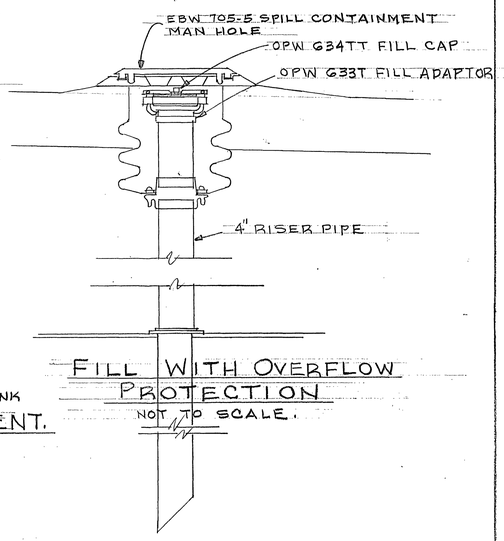

FILL WITH OVERFLOW PROTECTION

NOT TO SCALE.

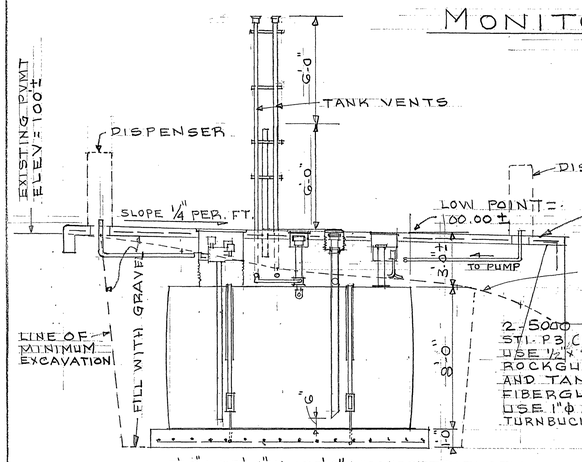

SECTION AT TANK

SCALE: 1/4" = 1'-0"

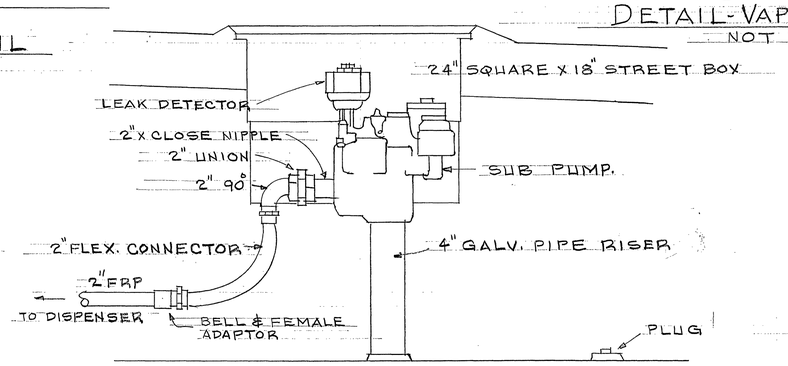

DETAIL-STANDARD SUBMERGE PUMP

NOT TO SCALE

GENERAL NOTES:

COAT ALL UNUSED TANK BUNGS (PLUGS) WITH PROTECTIVE COATING TO MATCH TANK

WRAP ALL STEEL RISERS AND FLEXIBLE CONNECTORS WITH CORROSION PROOF TAPE.

DATE	REV.	DESCRIPTION	BY

Charles M Huffine — CITY ENGINEER

DRAWN L.B.C.
CHECKED
APPROVED
DATE 7-3-89
PLAN NO. 11-89-A

NEW FUELING STATION
UTILITY LINES SITE
3447 READ ROAD, N.E.
ROANOKE, VIRGINIA.

OFFICE OF CITY ENGINEER
MUNICIPAL BUILDING, ROOM 350
215 CHURCH AVENUE, S.W.
ROANOKE, VIRGINIA 24011

SHEET 2 OF 3

53 BPXC