1. FOR 6" PIPE LINE, EXTERIOR VAULT DIMENSIONS SHALL BE (L x W x H) 6' X 8' X 5' WITH DOMESTIC TAP MADE INSIDE VAULT AS SHOWN BELOW.
2. FOR 8" PIPE LINE EXTERIOR VAULT DIMENSIONS SHALL BE (L X W X H) 6' X 8' WITH DOMESTIC TAP MADE OUTSIDE VAULT. BALL VALVE WITH LOCKING TABS SHALL BE PROVIDED INSIDE VAULT TO ALLOW FOR BLOCKOUT OF DOMESTIC METER.
3. SINGLE DETECTOR CHECK VALVE SHALL BE WILKINS 310 DALW, WATTS 919-SSDDTY - BP, OR APPROVED EQUAL WITH FLANGED END CONNECTIONS, BYPASS ASSEMBLY, AND DBB DSAV GATE VALVE.
4. BYPASS ASSEMBLY SHALL INCLUDE 2 BALL VALVES TO ISOLATE METER.
5. DOMESTIC SHALL BE TYPE K COPPER WITH COMP JOINT FITTINGS. BALL VALVE AT TAPPING SADDLE (WITH LOCKING TABS) AND CHECK VALVE ON OUTLET.
6. DOMESTIC METER AND BYPASS METER TO BE SUPPLIED BY OWNER AND INSTALLED BY VENDOR.
7. "UNI-FLANGE" ADAPTOR FLANGE, OR APPROVED EQUAL, OR FLANGED - PLAIN END PIPING REQUIRED FOR INLET AND OUTLET PIPING.
8. VAULT TO BE INSTALLED ON MIN. 6" COMPACTED VDOT 357 STONE WITH FILTER FABRIC PLACED BETWEEN BOTTOM OF VAULT AND STONE BEDDING. FILTER FABRIC TO EXTEND VERTICALLY A MINIMUM OF 6" ON ALL FOUR SIDES OF VAULT.

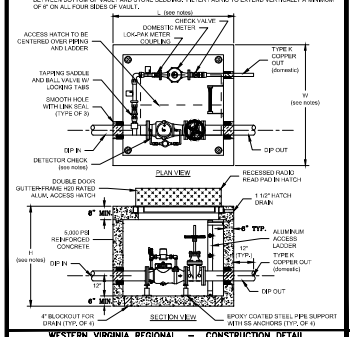

WESTERN VIRGINIA REGIONAL – CONSTRUCTION DETAIL

COMMERCIAL METER VAULT — W-7 — 09/07/17

1. FILTER FABRIC TO BE INSTALLED BETWEEN BOTTOM OF PIPE AND STONE BEDDING. FABRIC TO EXTEND VERTICALLY A MINIMUM OF 6" FROM BOTTOM OF VAULT (FULL CIRCUMFERENCE).

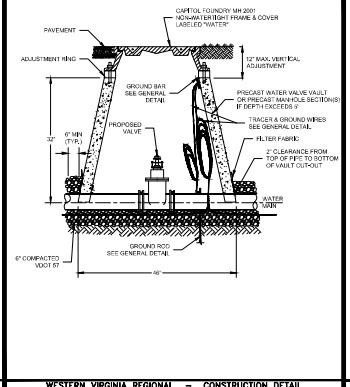

WESTERN VIRGINIA REGIONAL – CONSTRUCTION DETAIL

WATER LINE VALVE & VAULT — W-9 — 01/01/14

1. USE MODERATELY STIFF MIX OF NON SHRINK GROUT. SAND, AND 1/2" AND LESS DIAMETER GRAVEL WITH 28 DAYS STRENGTH AT MINIMUM 3,000 P.S.I.
2. MIXES TO BE FORCED INTO ALL GROOVES AND UNDER FLANGE OF FRAME AND LEFT AT OR ABOVE TOP OF FLANGE.
3. DO NOT BACKFILL AROUND FRAME AND COVER FOR 48 HOURS AFTER CONCRETE IS PLACED. THE USE OF HIGH EARLY STRENGTH CEMENT WOULD REDUCE TIME TO 24 HRS.
4. RESTRICT TRAFFIC LOAD FOR A MINIMUM OF 24 HOURS.

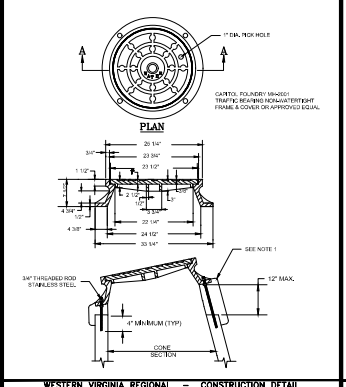

WESTERN VIRGINIA REGIONAL – CONSTRUCTION DETAIL

VAULT FRAME AND COVER — W-16 — 01/01/14

1. PUBLIC HYDRANTS SHALL BE PAINTED SILVER WITH AN ORLASTED PAINT. PRIVATE HYDRANTS SHALL ALSO BE PAINTED SILVER WITH AN ORLASTED PAINT UNLESS OTHERWISE SPECIFIED BY THE JURISDICTIONAL FIRE MARSHALL.
2. FIRE HYDRANT SHALL BE INSTALLED 2' MIN. AND 4' MAX. FROM BACK OF CURB OR 6' MIN. AND 12' MAX. FROM EDGE OF PAVEMENT WHEN CURB IS NOT PRESENT. FIRE HYDRANT TO BE INSTALLED WITHIN RIGHT-OF-WAY OR EASEMENT LINE.
3. AREA AROUND HYDRANT AT A RADIUS OF 4' TO BE LEVEL AND UNOBSTRUCTED.
4. WATERPROOF BAGS OR OUT OF GRAVEL PADS SHALL BE PLACED OVER ALL WEEPS INSTALLED FIRE HYDRANTS.
5. HYDRANTS SHALL BE BROKEN AWAY BELOW GRADE AND RESTRAINED WITH APPROVED MCJ GLAND RESTRAINTS. WHEN PRESSURE OVER 150 PSI, ALSO REQUIRES CONCRETE THRUST BLOCKS AS SHOWN BELOW.
6. IF DURING CONSTRUCTION THE SEASONAL WATER LEVEL IS NOTICED TO BE ABOVE THE DRAIN OUTLETS OF THE PROPOSED HYDRANT, THE FIRE FIGHTING HYDRANT SHALL BE INSTALLED BY VDOT THAT THE HYDRANT CAN BE RELOCATED TO A SUITABLE LOCATION, DRILLED, OR THE DRAIN HOLE PLUGGED.
7. TWO WRAPS OF TRACER WIRE SHALL BE WRAPPED AT BASE OF HYDRANT.
8. APPROVED MODELS - AVK MODEL 2780, AFC MODEL B-84-B-6, MUELLER CENTURION A423, KENNEDY R119 OR EQUIVALENT.
9. WHERE HYDRANT LATERALS ARE APPROVED BY THE PARTICIPATING UTILITY TO BE LONGER IN LENGTH, MAKING THE CONTINUOUS SECTION OF PIPE ON EACH SIDE OF THE GATE VALVE UNPLANNED, SUCH THAT THE UNITS SHALL BE INSTALLED BETWEEN THE TEE AND GATE VALVE, INLEAD OF RODDING, HOWEVER, A RODDED CONTINUOUS SECTION OF PIPE SHALL ALWAYS BE INSTALLED BETWEEN THE GATE VALVE AND HYDRANT.

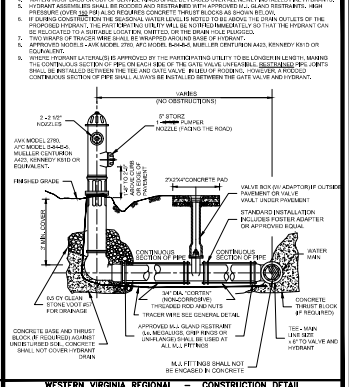

WESTERN VIRGINIA REGIONAL – CONSTRUCTION DETAIL

FIRE HYDRANT ASSEMBLY — W-17 — 02/10/15

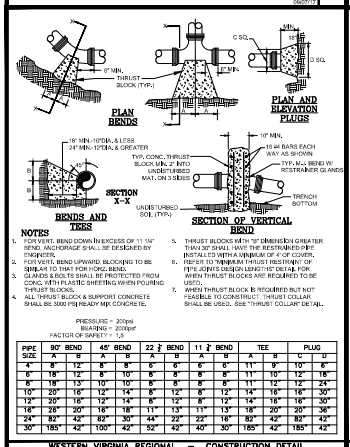

NOTES

1. FOR VERT. BEND DOWN IN EXCESS OF 11 1/4° BEND, ANCHORAGE SHALL BE DESIGNED BY ENGR.
2. FOR VERT. BEND UPWARD, BLOCKING TO BE SHALL BE THAT FOR HORZ. BEND.
3. GLANDS & BOLTS SHALL BE PROTECTED FROM CONC. WITH PLASTIC SHEETING WHEN POURING THRUST BLOCKS.
4. ALL THRUST BLOCK & SUPPORT CONCRETE SHALL BE 3000 PSI READY MIX CONCRETE.
5. THRUST BLOCKS WITH 18" DIMENSION GREATER THAN 36" SHALL HAVE THE RESTRAINED PIPE INSTALLED WITH A MINIMUM OF 4 OF COVER.
6. REFER TO "MINIMUM THRUST RESTRAINT OF PIPE JOINTS DESIGN LENGTHS" DETAIL FOR WHEN THRUST BLOCKS ARE REQUIRED TO BE USED.
7. WHEN THRUST BLOCK IS REQUIRED BUT NOT FEASIBLE TO CONSTRUCT, THRUST COLLAR SHALL BE USED. SEE "THRUST COLLAR" DETAIL.

PRESSURE = 200psi
BEARING = 2000psf
FACTOR OF SAFETY = 1.5

PIPE SIZE	90° BEND A	90° BEND B	45° BEND A	45° BEND B	22 1/2° BEND A	22 1/2° BEND B	11 1/2° BEND A	11 1/2° BEND B	TEE A	TEE B	TEE C	TEE D	PLUG A	PLUG B
4"	8"	12"	8"	8"	6"	6"	6"	6"	11"	9"	10"	6"		
6"	18"	12"	8"	10"	8"	8"	8"	8"	11"	10"	12"	18"		
8"	18"	13"	10"	10"	8"	8"	8"	8"	11"	12"	12"	24"		
10"	20"	16"	12"	14"	8"	12"	8"	12"	14"	18"	16"	30"		
12"	20"	16"	12"	14"	8"	12"	8"	12"	14"	18"	16"	30"		
16"	28"	20"	16"	18"	11"	13"	11"	13"	18"	20"	20"	36"		
24"	82"	42"	62"	30"	44"	22"	22"	16"	82"	42"	82"	42"		
30"	185"	42"	100"	42"	52"	42"	40"	30"	185"	42"	185"	42"		

WESTERN VIRGINIA REGIONAL – CONSTRUCTION DETAIL

THRUST BLOCK REQUIREMENTS — W-18 — 02/10/15

FACTOR OF SAFETY = 1.5

PIPE SIZE	PIPE MATL	90° BEND	45° BEND	22 1/2° BEND	11 1/2° BEND	VALVE/ PLUG (NOTE 2)	TEE BRANCH (NOTE 3)	REDUCER (NOTE 4)	45° VERT.	22 1/2° VERT.	11 1/2° VERT.
6"	D.I.	28'	21'	6'	3'	50'	26'	26'	21'	10'	5'
8"	D.I.	36'	21'	8'	4'	65'	41'	27'	27'	13'	7'
10"	D.I.	43'	21'	9'	5'	77'	53'	26'	32'	16'	8'
12"	D.I.	51'	21'	10'	5'	91'	67'	27'	38'	18'	9'
6"	PVC	29'	21'	6'	3'	78'	25'	40'	32'	16'	8'
8"	PVC	37'	21'	8'	4'	102'	49'	43'	42'	21'	10'
10"	PVC	44'	21'	9'	5'	122'	68'	41'	51'	25'	12'
12"	PVC	51'	21'	11'	6'	143'	89'	42'	60'	29'	15'

1. ALL JOINTS SHALL BE RESTRAINED ON BOTH SIDES OF THE FITTING AND DOCUMENTED BY THE INSPECTOR FOR THE LENGTH SHOWN UNLESS OTHERWISE INDICATED.
2. RESTRAINED LENGTH SHOWN REFERS TO ANY DESIGNED OR POTENTIAL LINE STOP, INCLUDING ALL GATE VALVES.
3. RESTRAINED LENGTH SHOWN REFERS TO THE BRANCH LINE ONLY. THE CONTINUOUS PIPE LENGTH OF THE MAIN RUN SHALL BE A MINIMUM OF 10' ON EACH SIDE OF THE TEE.
4. RESTRAINED LENGTH SHOWN IS BASED ON REDUCING PIPE DIAMETER TO ONE SIZE SMALLER THAN PIPE LISTED (ANY OTHER DIAMETER REDUCTION WILL REQUIRE ADDITIONAL CALCULATIONS BEFORE INSTALLATION). RESTRAINED LENGTH SHOWN IS UPSTREAM ON THE LARGE SIDE OF THE REDUCER.
5. 12" AND SMALLER DIAMETER: IF UNDER 100 PSI WORKING PRESSURE, RESTRAINED JOINT(S) ARE TO BE USED. IF EQUAL TO OR OVER 100 PSI WORKING PRESSURE, BOTH THRUST BLOCK(S) AND RESTRAINED JOINT(S) SHALL BE USED.

   LARGER THAN 12" DIAMETER: IF UNDER 100 PSI WORKING PRESSURE, RESTRAINED JOINT(S) ARE TO BE USED. IF EQUAL TO OR OVER 100 PSI WORKING PRESSURE, BOTH THRUST BLOCK(S) AND RESTRAINED JOINT(S) SHALL BE USED (UNLESS OTHERWISE APPROVED BY THE PARTICIPATING UTILITY).
6. FOR RESTRAINED JOINT PIPING REQUIREMENTS AT FITTING R.J. PVC AND R.J. DIP MAY BE USED INTERCHANGEABLY WITH APPROVAL FROM PARTICIPATING UTILITY. CONTRACTOR MUST PLAN ACCORDINGLY FOR THE DIFFERENCE IN PVC AND DIP BELL AND SPIGOT DIMENSIONS.

WESTERN VIRGINIA REGIONAL – CONSTRUCTION DETAIL

MINIMUM THRUST RESTRAINT OF PIPE JOINTS DESIGN LENGTHS — W-19 — 02/10/15

1. TAPPING SLEEVE SHALL BE POWERSTAL MODEL 3490 TYPE 304 STAINLESS STEEL WITH CARBON STEEL FLANGE, ROMAC'S MODEL SST III, FORD MODEL FTSS WITH CARBON STEEL FLANGE OR APPROVED EQUIVALENT. SLEEVE SHALL BE RATED AT 100 PSI OVER WORKING PRESSURE AND MUST HAVE A TEST PLUG.
2. TAPPING VALVE SHALL BE AVK RESILIENT SEATED GATE VALVE SERIES 25 MJ/FL, MUELLER T-2360 RESILIENT WEDGE TAPPING VALVE WITH MJ/FL, OR AFC SERIES 2500 RESILIENT WEDGE TAPPING VALVE WITH MJ/FL. VALVE SHALL BE RATED AT 250 PSI.
3. TAPPING SLEEVE AND VALVE SHALL BE FULL PORT TO ACCEPT FULL SIZE SHILL CUTTER.
4. STEEL FLANGE SHALL MEET AWWA C207.
5. SIDE-CHASE TAPPING NOT ALLOWED UNLESS APPROVED BY PARTICIPATING UTILITY.

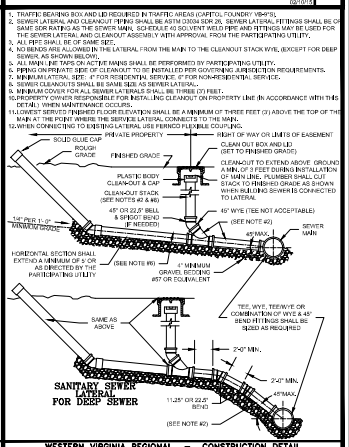

WESTERN VIRGINIA REGIONAL – CONSTRUCTION DETAIL

TAPPING SLEEVE AND VALVE — W-21 — 01/01/14

1. TRAFFIC BEARING BOX AND LID REQUIRED IN TRAFFIC AREAS (CAPITOL FOUNDRY V5847-S).
2. SEWER LATERAL AND CLEANOUT PIPING SHALL BE ASTM D3034 SDR 26. SEWER LATERAL FITTINGS SHALL BE OF SAME SDR RATING AS THE SEWER MAIN. SCHEDULE 40 SCH VENT WELD PIPE AND FITTINGS MAY BE USED FOR THE SEWER LATERAL AND CLEANOUT ASSEMBLY WITH APPROVAL FROM THE PARTICIPATING UTILITY.
3. ALL PIPE SHALL BE OF SAME SIZE.
4. NO BENDS ARE ALLOWED IN THE LATERAL FROM THE MAIN TO THE CLEANOUT STACK W/YE, (EXCEPT FOR DEEP SEWER, AS SHOWN BELOW).
5. ALL MAIN LINE TAPS ON ACTIVE MAINS SHALL BE PERFORMED BY PARTICIPATING UTILITY.
6. PIPING ON PRIVATE SIDE OF CLEANOUT TO BE INSTALLED PER GOVERNING JURISDICTION REQUIREMENTS.
7. MINIMUM LATERAL SIZE - 4" FOR RESIDENTIAL SERVICE, 6" FOR NON-RESIDENTIAL SERVICE.
8. SEWER CLEANOUTS SHALL BE SAME SIZE AS SEWER LATERAL.
9. MINIMUM COVER FOR ALL SEWER LATERALS SHALL BE THREE (3) FEET.
10. PROPERTY OWNER RESPONSIBLE FOR INSTALLING CLEANOUT ON PROPERTY LINE (IN ACCORDANCE WITH THIS DETAIL) WHEN MAINTENANCE OCCURS.
11. FOLLOWING SERVICE FINISHED FLOOR ELEVATION SHALL BE A MINIMUM OF THREE FEET (3') ABOVE THE TOP OF THE MAIN AT THE POINT WHERE THE SERVICE LATERAL CONNECTS TO THE MAIN.
12. WHEN CONNECTING TO EXISTING LATERAL USE PERMCO FLEXIBLE COUPLING.

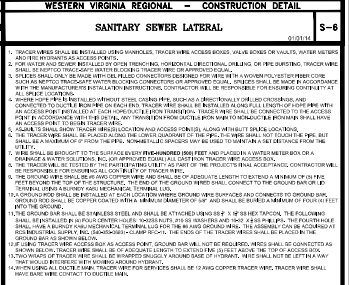

WESTERN VIRGINIA REGIONAL – CONSTRUCTION DETAIL

SANITARY SEWER LATERAL — S-6 — 01/01/14

BLUE = TRACE SAFE TRACER WIRE
BLACK = GROUND WIRE & GROUND BAR
TS19-IL-LC-C = TRACE SAFE LOCATING CLIP AT GROUND BAR
TS19-IL-C = SERVICE LATERAL TRACE SAFE CONNECTOR
GROUND WIRE = #6 AWG COPPER WIRE
NOTE: LEAVE FIVE FEET (5') OF EXCESS TRACER WIRE COILED UP IN VAULT

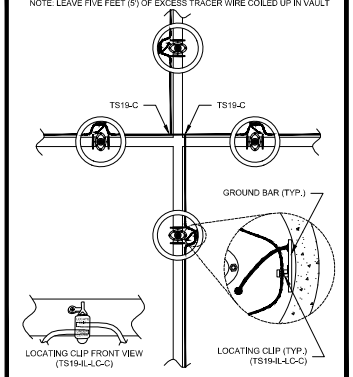

WESTERN VIRGINIA REGIONAL – CONSTRUCTION DETAIL

TRACER WIRE SAMPLE TEE/CROSS INTERSECTION — G-4A — 09/06/18

1. BEDDING, HAUNCHING AND INITIAL BACKFILL CONSTRUCTION SHALL BE IN ACCORDANCE WITH THIS DETAIL AND MANUFACTURER'S RECOMMENDATION.
2. ALL PVC PIPE SHALL BE BEDDED IN COMPACTED VDOT #57 OR #68 STONE OR CRUSHER RUN.
3. IN AREAS SUBJECTED TO VEHICULAR TRAFFIC, BEDDING STONE AND FILL SHALL BE PLACED IN 6" LIFTS FROM BOTTOM OF TRENCH TO 1' ABOVE THE PIPE AND THE REMAINING SHALL BE PLACED IN 12" LIFTS AND SHALL BE COMPACTED TO AT LEAST 95% OF MAXIMUM DENSITY AS DETERMINED BY ASTM D 698.
4. BEDDING REQUIREMENTS FOR DUCTILE IRON WATER LINE ARE DEPENDENT ON MANUFACTURER'S BEDDING CRITERIA.
5. ALL EXCAVATIONS SHALL COMPLY WITH OSHA TECHNICAL MANUAL, CHAPTER 2, TITLED "EXCAVATIONS: HAZARD RECOGNITION IN TRENCHING AND SHORING."
6. THE TRACER WIRE SHALL BE PLACED ALONG THE LOWER QUADRANT OF THE PIPE. THE WIRE SHALL NOT TOUCH THE PIPE, BUT SHALL BE A MAXIMUM OF 6" FROM THE PIPE. NON-METALLIC SPACERS MAY BE USED TO MAINTAIN A SET DISTANCE FROM THE UTILITY.

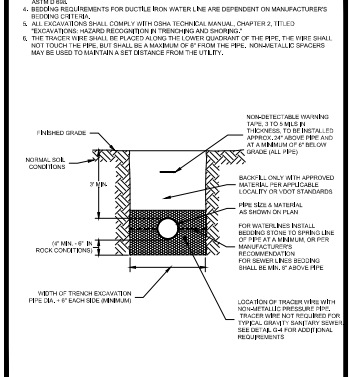

WESTERN VIRGINIA REGIONAL – CONSTRUCTION DETAIL

BEDDING AND BACKFILL OUTSIDE OF PAVED AREAS — G-11 — 08/01/16

1. BEDDING, HAUNCHING AND INITIAL BACKFILL CONSTRUCTION SHALL BE IN ACCORDANCE WITH THIS DETAIL AND MANUFACTURER'S RECOMMENDATION.
2. ALL PVC PIPE SHALL BE BEDDED IN COMPACTED VDOT #57 OR #68 STONE.
3. IN VDOT ROW, THE CONTRACTOR SHALL REPLACE THE PAVEMENT AS REQUIRED AND SPECIFIED BY VDOT. IN ROANOKE CITY, CONTRACTOR SHALL REPLACE PAVEMENT AS REQUIRED BY CITY OF ROANOKE RIGHT OF WAY EXCAVATION AND RESTORATION STANDARDS, LATEST EDITION.
4. ALL CONSTRUCTION WITHIN THE PUBLIC RIGHT-OF-WAY SHALL BE AS SPECIFIED BY VDOT OR APPLICABLE LOCALITY.
5. PRIOR TO CONSTRUCTION, CONTRACTOR IS RESPONSIBLE FOR SECURING ALL REQUIRED PERMITS FROM VDOT AND/OR APPLICABLE LOCALITY.
6. IN AREAS SUBJECTED TO VEHICULAR TRAFFIC, BEDDING STONE AND FILL SHALL BE PLACED IN 6" LIFTS AND SHALL BE COMPACTED TO AT LEAST 95% OF MAXIMUM DENSITY AS DETERMINED BY ASTM D 698.
7. ALL SEWER LINE PIPE SHALL BE BEDDED IN COMPACTED GRANULAR MATERIAL. BEDDING REQUIREMENTS FOR DUCTILE SEWER LINE ARE DEPENDENT ON MANUFACTURER'S BEDDING CRITERIA.
8. BENCH CUT ON EACH SIDE OF PAVEMENT SHALL BE IN ACCORDANCE WITH VDOT OR APPLICABLE LOCALITY'S SPECIFICATIONS.
9. ALL EXCAVATIONS SHALL COMPLY WITH OSHA TECHNICAL MANUAL, CHAPTER 2, TITLED "EXCAVATIONS: HAZARD RECOGNITION IN TRENCHING AND SHORING."
10. THE TRACER WIRE SHALL BE PLACED ALONG THE LOWER QUADRANT OF THE PIPE. THE WIRE SHALL NOT TOUCH THE PIPE, BUT SHALL BE A MAXIMUM OF 6" FROM THE PIPE. NON-METALLIC SPACERS MAY BE USED TO MAINTAIN A SET DISTANCE FROM THE UTILITY.

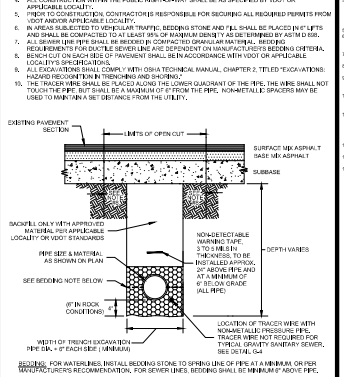

BEDDING: FOR WATERLINES, INSTALL BEDDING STONE TO SPRING LINE OF PIPE AT A MINIMUM, OR PER MANUFACTURER'S RECOMMENDATION, FOR SEWER LINES, BEDDING SHALL BE MINIMUM 9" ABOVE PIPE.

WESTERN VIRGINIA REGIONAL – CONSTRUCTION DETAIL

BEDDING AND BACKFILL UNDER PAVEMENT AND IN RIGHT-OF-WAY — G-12 — 08/01/16

1. TRACER WIRES SHALL BE INSTALLED USING WHOOLES. TRACER WIRE ACCESS BOXES, VALVE BOXES OR VAULTS, WATER METERS AND FIRE HYDRANTS AS ACCESS POINTS.
2. FOR WATER AND SEWER INSTALLATIONS OFFSETTING DIRECTIONAL DRILLING OR PIPE BURSTING, TRACER WIRE SHALL BE SEPTICO TRACE-SAFE WATER BLOCKING TRACER WIRE OR APPROVED EQUAL.
3. SPLICES SHALL ONLY BE MADE WITH DELPHILIDE CONNECTORS DESIGNED FOR WIRE WITH A WOVEN POLYESTER FIBER CORE SUCH AS NOPTICO TRACE-SAFE WATER BLOCKING CONNECTORS OR APPROVED EQUAL. SPLICES SHALL BE MADE IN ACCORDANCE WITH THE MANUFACTURER'S INSTALLATION INSTRUCTIONS. CONTRACTOR WILL BE RESPONSIBLE FOR ENSURING CONTINUITY AT ALL SPLICE LOCATIONS.
4. WHERE HDPE PIPE IS INSTALLED WITHOUT STEEL CASING PIPE, SUCH AS A DIRECTIONAL LY DRILLED CROSSINGS, AND CONNECTED TO DUCTILE IRON PIPE ON EACH END, TRACER WIRE SHALL BE INSTALLED ALONG FULL LENGTH OF HDPE PIPE WITH AN ACCESS POINT INSTALLED AT EACH HDPE/DUCTILE IRON TRANSITION. TRACER WIRE SHALL BE CONNECTED TO THE ACCESS POINT IN ACCORDANCE WITH THE DETAIL. ANY TRANSITION FROM DUCTILE IRON TO NON-DUCTILE IRON PIPE SHALL HAVE AN ACCESS POINT TO BEGIN TRACER WIRE.
5. TRACER WIRE SHALL BE INSTALLED WITH ACCESS LOCATION AND ACCESS POINT(S) ALONG WITHBUT SPLICE LOCATIONS.
6. THE TRACER WIRE SHALL BE PLACED ALONG THE LOWER QUADRANT OF THE PIPE. THE WIRE SHALL NOT TOUCH THE PIPE, BUT SHALL BE A MAXIMUM OF 6" FROM THE PIPE. NONMETALLIC SPACERS MAY BE USED TO MAINTAIN A SET DISTANCE FROM THE UTILITY.
7. WIRE SHALL BE BROUGHT TO THE SURFACE EVERY **FIVE-HUNDRED (500)** FEET AND PLACED IN A WATER METER BOX OR DRAINAGE & WATER SOLUTIONS, INC. (OR APPROVED EQUAL) ALL CASTING TRACER WIRE ACCESS BOX.
8. THE TRACER WILL BE TESTED BY THE PARTICIPATING UTILITY AS PART OF THE PROJECTS FINAL ACCEPTANCE. CONTRACTOR WILL BE RESPONSIBLE FOR REPAIRING ANY BREAKS IN THE WIRE.
9. THE GROUND WIRE SHALL BE #6 AWG COPPER WIRE AND SHALL BE OF ADEQUATE LENGTH TO EXTEND A MINIMUM OF 10 FEET BEYOND THE TOP OF THE STRUCTURE. THE END OF THE GROUND WIRE SHALL CONNECT TO THE GROUND BAR OR LUG TERMINAL USING A BURNDY KAS MECHANICAL TERMINAL LUG.
10. A GROUND ROD SHALL BE INSTALLED AT EACH LOCATION WHERE GROUND WIRE SPLICED AND CONNECTS TO GROUND BAR. GROUND ROD SHALL BE COPPER COATED WITH A MINIMUM DIAMETER OF 5/8" AND SHALL BE DRIVEN A MINIMUM OF FOUR FEET INTO THE GROUND.
11. THE GROUND BAR SHALL BE STAINLESS STEEL AND SHALL BE ATTACHED USING SS 5/ 8" SS SHEET TAPCON. THE FOLLOWING SHALL BE INSTALLED IN AN OPEN SPRINKLER LOCATE, WHERE PRESENT, AND TAKE 1-8 FEET (FT.) FROM THE FINISHED GRADE, WITH ADDITIONAL HORIZONTAL TERMINAL LUG FOR THE AWG GROUND WIRE. THE ASSEMBLY CAN BE ACQUIRED FROM INDUSTRIAL SUPPLY INC. (540-342-5411) - CLAIR RD S.W. THE ENDS OF THE TRACER WIRE SHALL BE PLACED ON THE GROUND BAR AS SHOWN BELOW.
12. IF LONG TRACER WIRE ACCESS BOX AS ACCESS POINT, GROUND BAR WILL NOT BE REQUIRED, WIRES SHALL BE CONNECTED AS SHOWN BELOW. TRACER WIRE SHALL BE OF ADEQUATE LENGTH TO EXTEND FINE (5) FEET ABOVE THE TOP OF ACCESS BOX.
13. THE TRACER WIRE SHALL BE BRANDED (BUGGLY) AROUND BASE OF TRACER WIRE SHALL NOT BE LETTING WAY. TRACER WIRE BRANDED WITH "TRACER WIRE" (TRACER WIRE).
14. FOR INSTALLING ALL DUCTILE IRON WATER AND SEWER PIPE, SPLICES SHALL BE 12 AWG COPPER TRACER WIRE, TRACER WIRE SHALL HAVE BARE WIRE CONTACT TO DUCTILE IRON.

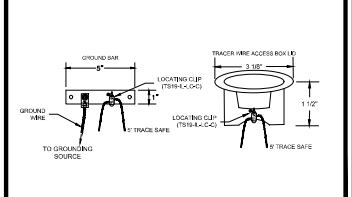

WESTERN VIRGINIA REGIONAL – CONSTRUCTION DETAIL

TRACER WIRE FOR NON-METALLIC PRESSURE PIPE — G-4 — 09/06/18

City of Roanoke
Planning, Building, & Development
COMPREHENSIVE DEVELOPMENT PLAN
APPROVED
by Aaron Cypher 10/26/2023

BALZER & ASSOCIATES
PLANNERS / ARCHITECTS
ENGINEERS / SURVEYORS
Roanoke / Richmond
New River Valley
Shenandoah Valley
www.balzer.cc
1208 Corporate Circle
Roanoke, VA 24018
540.772.9580

COMMONWEALTH OF VIRGINIA