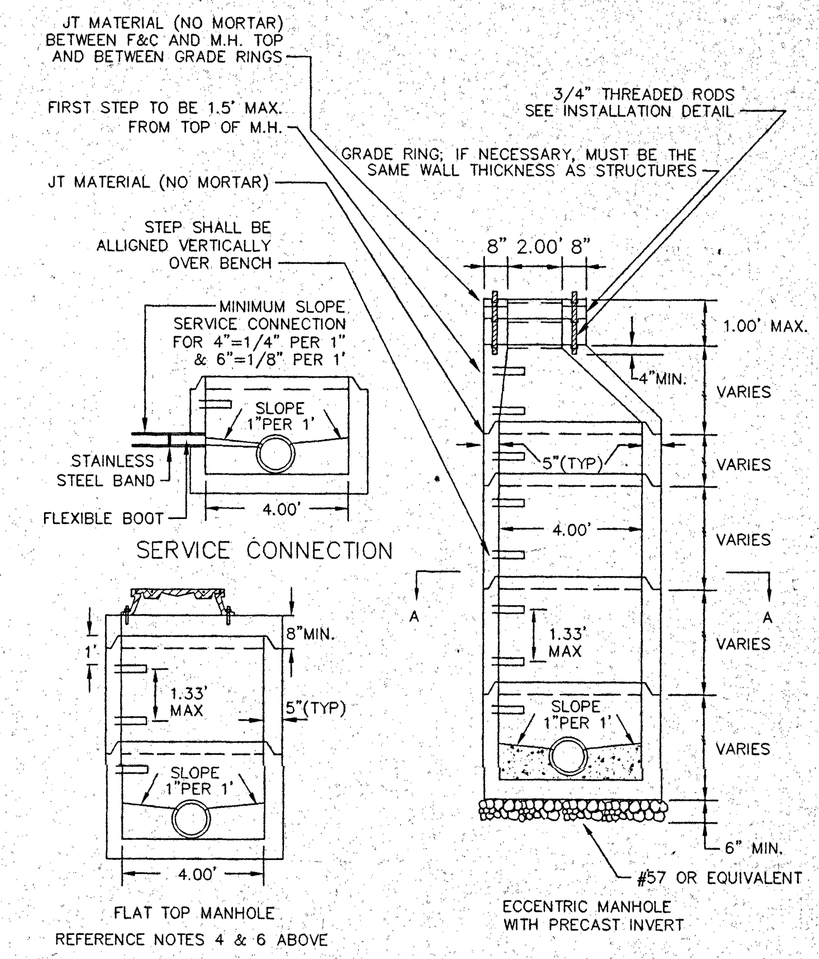

4' STANDARD MANHOLE FOR PIPE 15" OR SMALLER

NTS

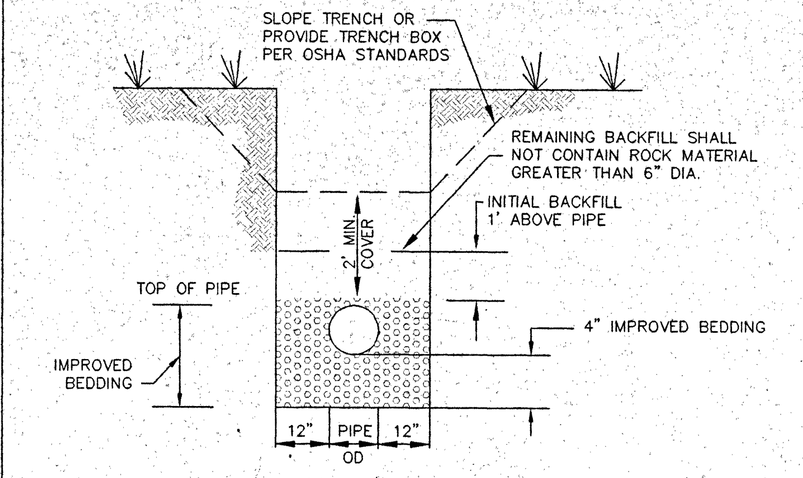

GRAVITY SEWER TRENCH

NTS

NOTE:
BACKFILL SHALL BE PLACED IN MAXIMUM OF 6" LIFTS

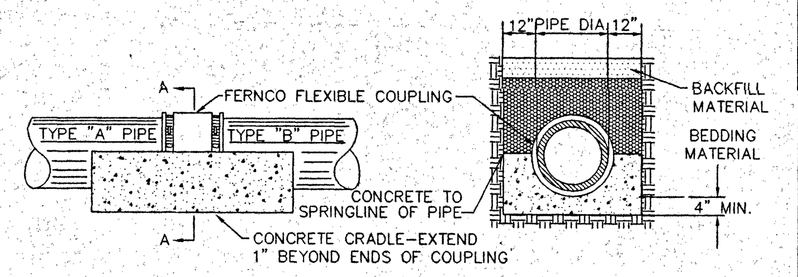

JOINING DISSIMILAR PIPE

NTS

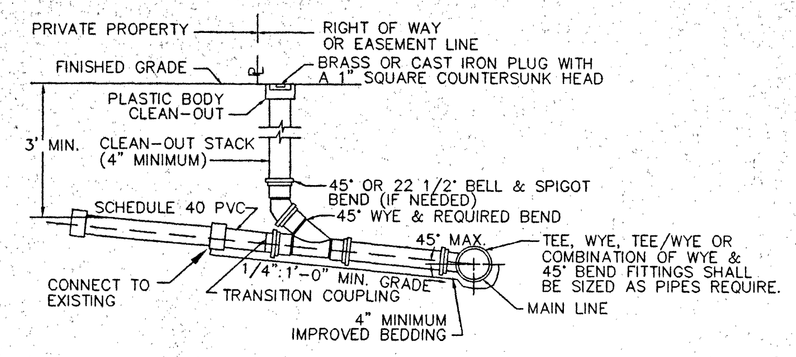

GENERAL NOTES:

1. TRAFFIC BEARING BOX REQUIRED IN TRAFFIC AREAS.
2. ALL PIPE AND FITTINGS SHALL BE OF SIMILAR MATERIAL.
3. ALL PIPE SHALL BE OF SAME SIZE.
4. NO BENDS ARE ALLOWED IN THE LATERAL FROM THE MAIN TO THE CLEAN-OUT STACK WYE. (EXCEPT AS NOTED)
5. MINIMUM COVER FOR ALL SEWER LATERALS SHALL BE THREE (3') FEET.

SANITARY SEWER LATERAL

NTS

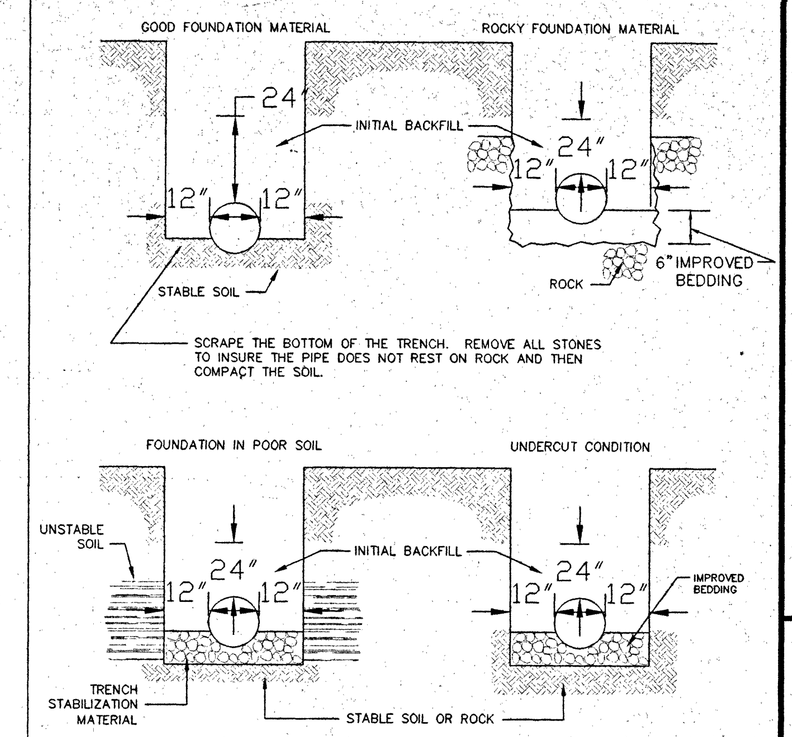

NOTES:

1. NO ROCKS SHALL BE ALLOWED WITHIN 24" OF THE WATER LINES.
2. NO ROCKS LARGER THAN 6" IN ANY DIMENSION SHALL BE ALLOWED ABOVE THE INITIAL BACKFILL.
3. THE INITIAL BACKFILL SHALL BE PLACED AND COMPACTED IN 6" LIFTS.
4. NO ORGANIC OR FROZEN MATERIAL OR DEBRIS SHALL BE ALLOWED IN THE TRENCH.
5. BELL HOLES SHALL BE DUG OUT IN ALL CASES.
6. THE BOTTOM OF THE TRENCH SHALL SUPPORT THE PIPE THROUGHOUT ITS ENTIRE LENGTH.

TRENCH INSTALLATION FOR PRESSURE PIPE

NTS

W1

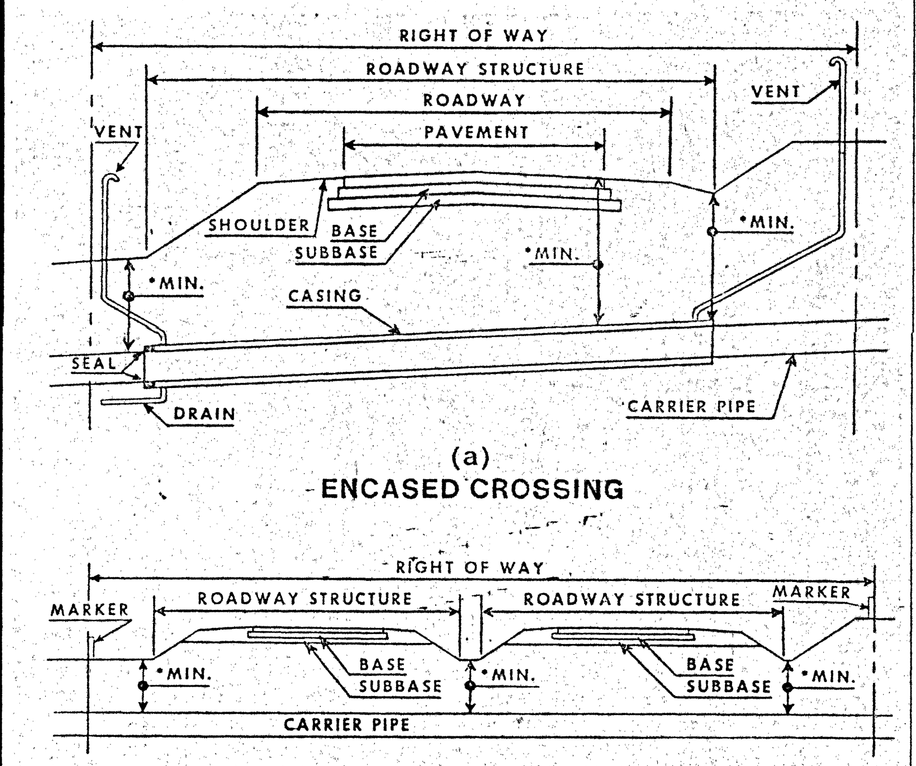

*Minimum depth of bury should be specified to conform with Departmental policy. Minimum depth = 3.0'

FIGURE 1
DESIGN ITEMS FOR PIPELINE CROSSINGS

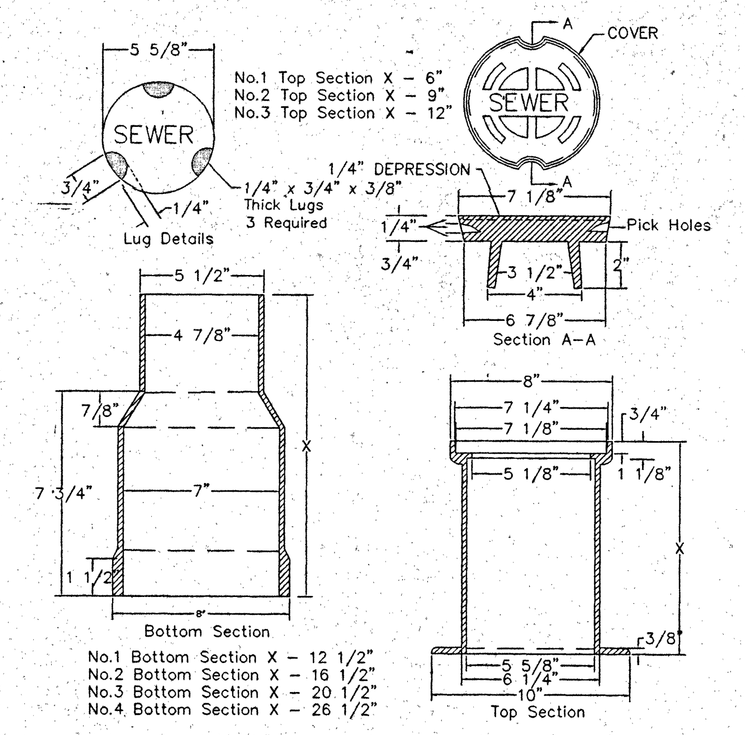

NOTE: A MINIMUM CLEARANCE OF 4 INCHES IS REQUIRED BETWEEN CLEANOUT CAP AND TOP OF COVER.

TRAFFIC BEARING CLEANOUT BOX

NTS

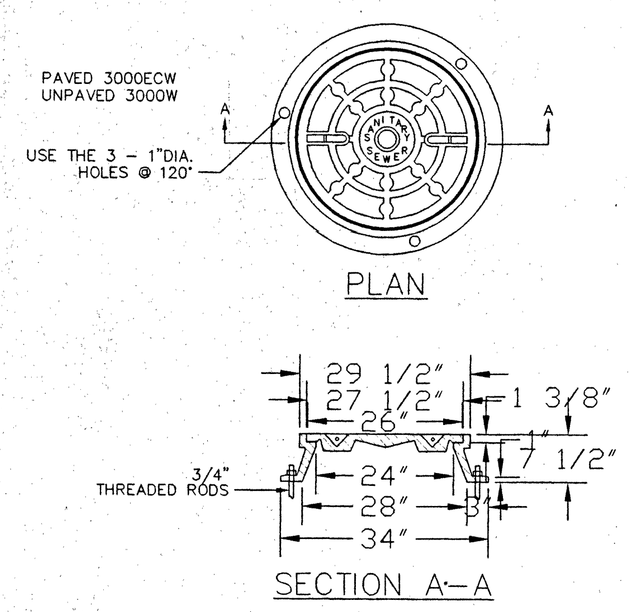

NOTE:
DEWEY BROTHERS INC. MH-RCR-3000ECW STANDARD FRAME & COVER (PAVED)

STANDARD MANHOLE FRAME & COVER

NTS

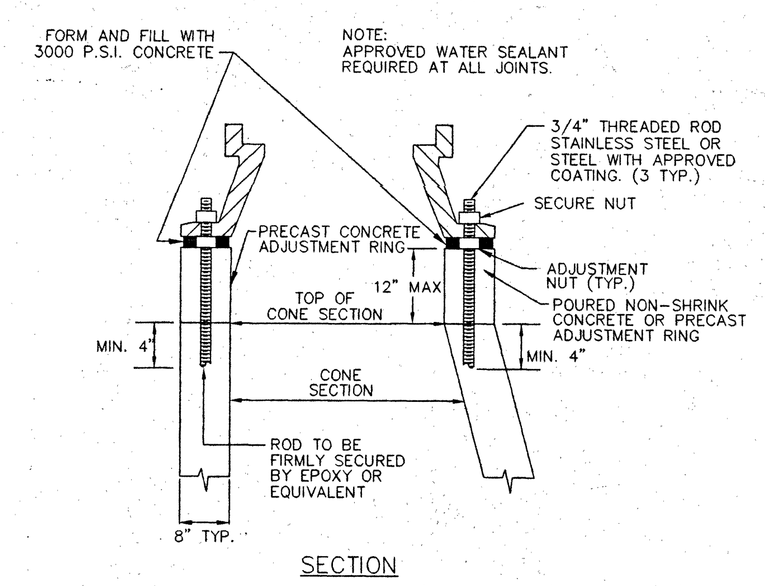

INSTALLATION DETAIL FOR FRAMES AND COVERS

NTS

LMW P.C.
ENGINEERING • ARCHITECTURE • SURVEYING
102 ALBEMARLE AVE., S.E.
ROANOKE, VIRGINIA 24013
☎ (540) 345-0675
FAX (540) 342-4456

CRAIG-NEW CASTLE P.S.A.
WATERLINE EXTENSION & SANITARY SEWER REHABILITATION
CRAIG COUNTY, VIRGINIA

NO.	DATE	DESCRIPTION	BY
1	5-31-00	VDOT	DRM
2	6-26-00	VDOT	DRM

SANITARY SEWER & MISCELLANEOUS DETAILS

COMMONWEALTH OF VIRGINIA
DOUGLAS R. MEREDITH, JR.
No. 22942
7-14-00
PROFESSIONAL ENGINEER

Designed By	DME/ETH
Drawn By	ETH
Checked By	DME
Approved By	DRM
Submitted By	DRM
Drawing	1563SEWDET.DWG
Date	6/8/00
Scale	NONE
Commission No.	1563
Sheet	13 of 14