FACTOR OF SAFETY = 1.5

PIPE SIZE	PIPE MAT'L	90° BEND	45° BEND	22½° BEND	11¼° BEND	VALVE/ PLUG (NOTE 2)	TEE BRANCH (NOTE 3)	REDUCER (NOTE 4)	45° VERT.	22½° VERT.	11¼° VERT.
6"	D.I.	28'	21'	6'	3'	50'	26'	26'	21'	10'	5'
8"	D.I.	36'	21'	8'	4'	65'	41'	27'	27'	13'	7'
10"	D.I.	43'	21'	9'	5'	77'	53'	26'	32'	16'	8'
12"	D.I.	51'	21'	10'	5'	91'	67'	27'	38'	18'	9'
6"	PVC	29'	21'	6'	3'	78'	25'	40'	32'	16'	8'
8"	PVC	37'	21'	8'	4'	102'	49'	43'	42'	21'	10'
10"	PVC	44'	21'	9'	5'	122'	68'	41'	51'	25'	12'
12"	PVC	51'	21'	11'	6'	143'	89'	42'	60'	29'	15'

1. ALL JOINTS SHALL BE RESTRAINED ON BOTH SIDES OF THE FITTING AND DOCUMENTED BY THE INSPECTOR FOR THE LENGTH SHOWN UNLESS OTHERWISE INDICATED.
2. RESTRAINED LENGTH SHOWN REFERS TO ANY DESIGNED OR POTENTIAL LINE STOP, INCLUDING ALL GATE VALVES.
3. RESTRAINED LENGTH SHOWN REFERS TO THE BRANCH LINE ONLY. THE CONTINUOUS PIPE LENGTH OF THE MAIN RUN SHALL BE A MINIMUM OF 10' ON EACH SIDE OF THE TEE.
4. RESTRAINED LENGTH SHOWN IS BASED ON REDUCING PIPE DIAMETER TO ONE SIZE SMALLER THAN PIPE LISTED (ANY OTHER DIAMETER REDUCTION WILL REQUIRE ADDITIONAL CALCULATIONS BEFORE INSTALLATION). RESTRAINED LENGTH SHOWN IS UPSTREAM ON THE LARGE SIDE OF THE REDUCER.
5. 12" AND SMALLER DIAMETER: IF UNDER 150 PSI WORKING PRESSURE, RESTRAINED JOINT(S) ARE TO BE USED. IF EQUAL TO OR OVER 150 PSI WORKING PRESSURE, BOTH THRUST BLOCK(S) AND RESTRAINED JOINT(S) SHALL BE USED.

   LARGER THAN 12" DIAMETER: IF UNDER 100 PSI WORKING PRESSURE, RESTRAINED JOINT(S) ARE TO BE USED. IF EQUAL TO OR OVER 100 PSI WORKING PRESSURE, BOTH THRUST BLOCK(S) AND RESTRAINED JOINT(S) SHALL BE USED (UNLESS OTHERWISE APPROVED BY THE PARTICIPATING UTILITY).
6. FOR RESTRAINED JOINT PIPING REQUIREMENTS AT FITTING R.J. PVC AND R.J. DIP MAY BE USED INTERCHANGEABLY WITH APPROVAL FROM PARTICIPATING UTILITY. CONTRACTOR MUST PLAN ACCORDINGLY FOR THE DIFFERENCE IN PVC AND DIP BELL AND SPIGOT DIMENSIONS.

WESTERN VIRGINIA REGIONAL - CONSTRUCTION DETAIL

MINIMUM THRUST RESTRAINT OF PIPE JOINTS DESIGN LENGTHS — 02/10/15 — **W-19**

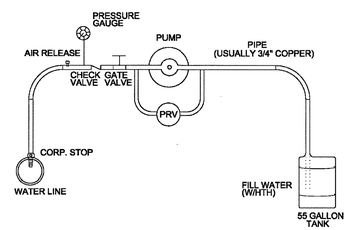

TYPICAL WATER PRESSURE TEST RIG

WESTERN VIRGINIA REGIONAL - CONSTRUCTION DETAIL

TYPICAL WATER PRESSURE TEST RIG — 01/01/14 — **W-20**

INSTALLATION OF DUCTILE IRON WATER MAINS
TABLE 3 AWWA C600-05
Maximum Joint Deflection Full Length of Pipe - Push on Type Joint

		Maximum Offset - S* (Inches)		Approximate Radius of Curve - R* Produced by Succession of Joints	
Nominal Pipe Size (Inches)	Deflection Angle - θ (degree)	Joint Length 18-Feet	Joint Length 20-Feet	Joint Length 18-Feet	Joint Length 20-Feet
3	5°	19	21	205	230
4	5°	19	21	205	230
6	5°	19	21	205	230
8	5°	19	21	205	230
10	5°	19	21	205	230
12	5°	19	21	205	230
14	3°	11	12	340	380
16	3°	11	12	340	380
18	3°	11	12	340	380
20	3°	11	12	340	380
24	3°	11	12	340	380
30	3°	11	12	340	380

* SEE FIGURE 4.
For 14-inch and larger push-on joints, maximum deflection angle may be larger than shown above. Consult the manufacturer.

INSTALLATION OF DUCTILE IRON WATER MAINS
TABLE 4 AWWA C600-05
Maximum Joint Deflection Full Length of Pipe - Mechanical Joint Pipe

		Maximum Offset - S* (Inches)		Approximate Radius of Curve - R* Produced by Succession of Joints	
Nominal Pipe Size (inches)	Deflection Angle - θ (degree)	Joint Length 18-Feet	Joint Length 20-Feet	Joint Length 18-Feet	Joint Length 20-Feet
3	8°-18"	31	35	125	140
4	8°-18"	31	35	125	140
6	7°-07"	27	30	145	160
8	5°-21"	20	22	195	220
10	5°-21"	20	22	195	220
12	5°-21"	20	22	195	220
14	3°-35"	13.5	15	285	320
16	3°-35"	13.5	15	285	320
18	3°-00"	11	12	340	380
20	3°-00"	11	12	340	380
24	2°-23"	9	10	450	500

* SEE FIGURE 4.

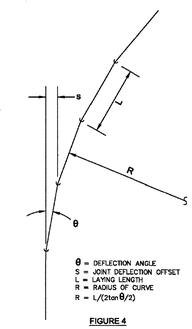

θ = DEFLECTION ANGLE
S = JOINT DEFLECTION OFFSET
L = LAYING LENGTH
R = RADIUS OF CURVE
R = L/(2tanθ/2)

FIGURE 4

WESTERN VIRGINIA REGIONAL - CONSTRUCTION DETAIL

DUCTILE IRON PIPE DEFLECTION ALLOWANCE TABLES — 01/01/14 — **W-22**

1. SETTER TO BE A.Y. McDONALD 720-215WXDD33, FORD VB72-15W-11-33 OR APPROVED EQUAL.
2. SADDLES MUST BE USED WITH ALL PLASTIC & DUCTILE IRON PIPE. SERVICE SADDLES SHALL BE USED IN ACCORDANCE WITH WATER DISTRIBUTION PIPING SPECIFICATION. SERVICE SADDLES FOR PLASTIC PIPE SHALL BE: POWERSEAL 3417, OR 3412AS, ROMAC 202S, OR 306, OR FORD METER FS202 OR FS303. FOR DUCTILE IRON PIPE USE THE ABOVE OR POWERSEAL 3413, ROMAC 202 OR FORD METER F202.
3. METER BOX SHALL BE CARSON/MID-STATES PLASTICS, INC. PLASTIC BOX WITH FORD "A" DOMESTIC SERIES FRAME WITH A NICOR DOMESTIC 12.25 CX LID WITH SENSUS RECESS, ADS CORRUGATED HDPE BOX WITH FORD "A" DOMESTIC SERIES FRAME WITH A NICOR DOMESTIC 12.25 CX LID WITH SENSUS RECESS OR APPROVED EQUAL. METER BOX SHALL NOT BE PLACED IN AREAS SUBJECT TO VEHICULAR TRAFFIC. IF TRAFFIC BEARING BOX IS REQUIRED, DESIGN ENGINEER SHALL CONSULT WITH PARTICIPATING UTILITY TO DETERMINE SITE SPECIFIC REQUIREMENTS.
4. CORPORATION STOP SHALL BE FORD FB1000-4-G-NL, MUELLER B-25008 OR APPROVED EQUAL.
5. SERVICE SHALL BE "K" TYPE COPPER, OR COPPER TUBE SIZE POLYETHYLENE (PE) 4710, SODR-9 (200 psi).
6. WHENEVER SIDEWALK EXISTS OR IS PROPOSED, MODIFY METER LOCATION AS DIRECTED.

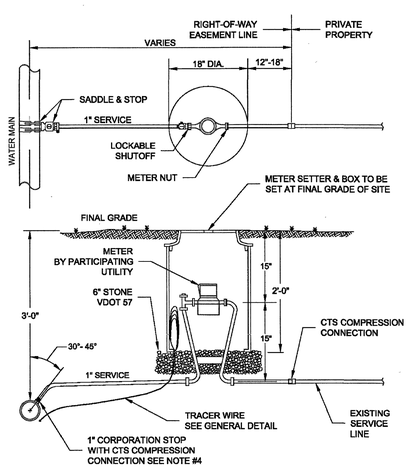

WESTERN VIRGINIA REGIONAL - CONSTRUCTION DETAIL

SINGLE RESIDENTIAL WATER SERVICE (REPLACEMENT OF EXISTING SERVICE) — 05/05/17 — **W-2**

1. SETTER TO BE A.Y. McDONALD 720-215 WXDD33, FORD VB72-15W-11-33 OR APPROVED EQUAL.
2. SADDLES MUST BE USED WITH ALL PLASTIC DUCTILE IRON PIPE. SERVICE SADDLES SHALL BE USED IN ACCORDANCE WITH WATER DISTRIBUTION PIPING SPECIFICATION. SERVICE SADDLES FOR PLASTIC PIPE SHALL BE POWERSEAL 3417, OR 3412AS, ROMAC 202S, OR 306, OR FORD METER FS202 OR FS303. FOR DUCTILE IRON PIPE USE THE ABOVE OR POWERSEAL 3413, ROMAC 202 OR FORD METER F202.
3. METER BOX SHALL BE CARSON/MID-STATES PLASTICS, INC. PLASTIC BOX WITH FORD "A" DOMESTIC SERIES FRAME WITH A NICOR DOMESTIC 12.25 CX LID WITH SENSUS RECESS, ADS CORRUGATED HDPE BOX WITH FORD "A" DOMESTIC SERIES FRAME WITH A NICOR DOMESTIC 12.25 CX LID WITH SENSUS RECESS OR APPROVED EQUAL. METER BOX SHALL NOT BE PLACED IN AREAS SUBJECT TO VEHICULAR TRAFFIC. IF TRAFFIC BEARING BOX IS REQUIRED, DESIGN ENGINEER SHALL CONSULT WITH PARTICIPATING UTILITY TO DETERMINE SITE SPECIFIC REQUIREMENTS.
4. WHENEVER SIDEWALK EXISTS OR IS PROPOSED, MODIFY METER LOCATION AS DIRECTED.
5. CORPORATION STOP SHALL BE FORD FB1000-4-G-NL, MUELLER B-25008 OR APPROVED EQUAL.
6. SERVICE SHALL BE "K" TYPE COPPER, OR COPPER TUBE SIZE POLYETHYLENE (PE) 4710, SODR-9 (200 psi).

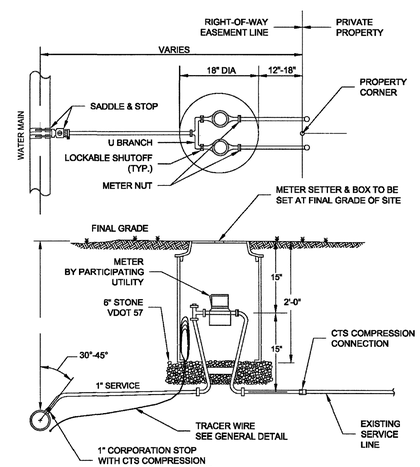

WESTERN VIRGINIA REGIONAL - CONSTRUCTION DETAIL

DOUBLE RESIDENTIAL WATER SERVICE (REPLACEMENT OF EXISTING SERVICE) — 05/05/17 — **W-4E**

parker DESIGN GROUP
ENGINEERS ▪ SURVEYORS ▪ PLANNERS ▪ LANDSCAPE ARCHITECTS
2122 Carolina Ave, SW
Roanoke, VA 24014
Ph: 540-387-1153
Fax: 540-389-5767
1915-B W. Cary Street
Richmond, VA 23220
Phone: 804-358-2947
Fax: 804-359-9645
180 AMT Tech Dr.
Suite 101-B
Rocky Mount, VA 24151
Phone: 804-358-2947
Fax: 804-359-9645
www.parkerdg.com

These documents are the property of Parker Design Group(PDG) and may not be reproduced or used without the express permission of PDG. Any reuse of these documents without authorization of PDG will be at the sole risk of the individual or entity utilizing said documents.

COMMONWEALTH OF VIRGINIA
SIMON L. RUTROUGH
Lic. No. 050774
02/12/2018
PROFESSIONAL ENGINEER

EDGEWOOD / WINDSOR WATERLINE UTILITY REPLACEMENT PLAN

WESTERN VIRGINIA WATER AUTHORITY
ROANOKE CITY, VIRGINIA

REVISIONS:

DESIGNED BY:
DRAWN BY:
CHECKED BY:

DATE: 12 FEBRUARY, 2018

SHEET TITLE: UTILITY DETAILS II

SCALE: N/A

SHEET NO. C13

rgan: S:\2017 Projects\17-0118 WVWA Raleigh Court Additional\6 (RWO)Active Engineering Production\17-0118 Cover, Notes, & Details.dwg