BLOCK AND GRAVEL DROP INLET SEDIMENT FILTER

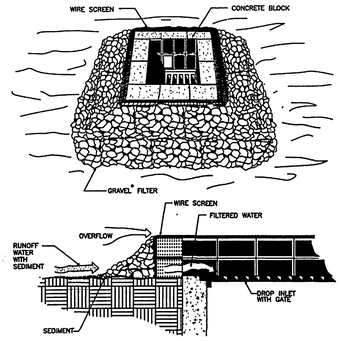

SPECIFIC APPLICATION

THIS METHOD OF INLET PROTECTION IS APPLICABLE WHERE HEAVY FLOWS ARE EXPECTED AND WHERE AN OVERFLOW CAPACITY IS NECESSARY TO PREVENT EXCESSIVE PONDING AROUND THE STRUCTURE.

* GRAVEL SHALL BE VDOT #3, #357 OR #5 COARSE AGGREGATE.

SOURCE: VA. DSWC PLATE. 3.07-3

18 C-1.2 C-5.2 **CITY INLET PROTECTION DETAIL** NO SCALE

TEMPORARY SEDIMENT TRAP

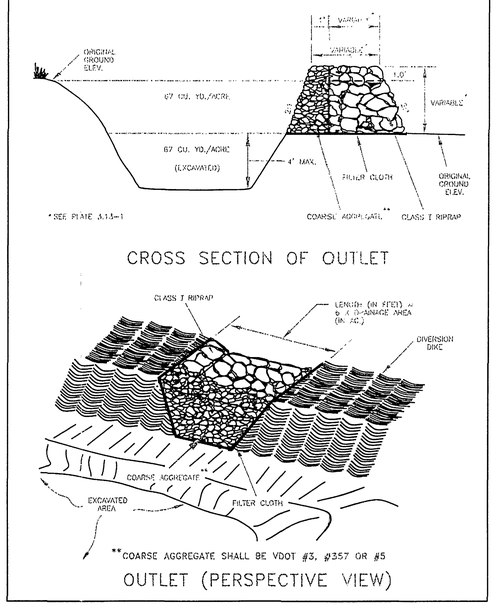

SOURCE: VA. DSWC PLATE. 3.13-2

16 C-1.2 C-5.2 **CITY SEDIMENT TRAP DETAIL** NO SCALE

NOTE: SEE MODIFICATIONS TO DETAIL ON DRAWING C-1.3

TEMPORARY RIGHT-OF-WAY DIVERSIONS

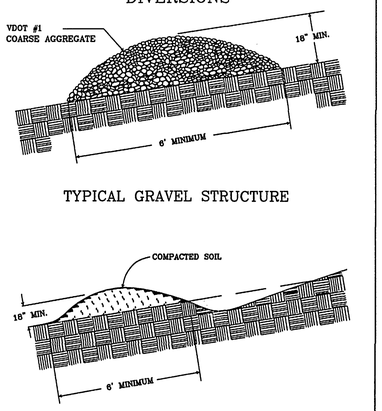

Source: Va. SWCC Plate 3.11-1

15 C-1.3 C-5.2 **CITY RIGHT-OF-WAY DIVERSION DETAIL** NO SCALE

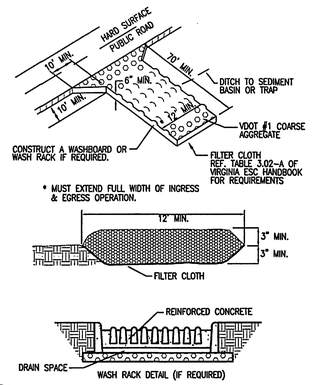

14 C-1.2 C-5.2 **CITY TEMP CONST ENTRANCE DETAIL, VAESC STD. 3.02** NO SCALE

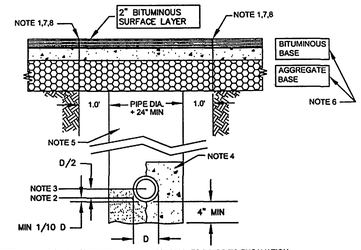

NOTES:

1. ALL PAVEMENTS SHALL BE SAW CUT WITH NEAT, UNIFORM LINES PRIOR TO EXCAVATION.
2. PIPE BEDDING MATERIAL SHALL BE CRUSHER RUN (VDOT NO. 25 OR 26) OR OPEN GRADED AGGREGATE (VDOT NO. 57,68, 7 OR 8). ALTERNATE MATERIAL MUST BE APPROVED BY THE CITY ENGINEER.
3. MAXIMUM DEPTH OF PIPE BEDDING MATERIAL IF USING OPEN GRADED AGGREGATE FOR BEDDING.
4. OPTIONAL CONCRETE ENCASEMENT FOR POWER OR COMMUNICATION CONDUIT. PROVIDE A MINIMUM OF 4" CONCRETE COVER FROM ALL SIDES OF CONDUIT.
5. BACKFILL MATERIAL SHALL BE VDOT NO. 21A AGGREGATE, PLACED IN LIFTS NOT EXCEEDING 6", AND COMPACTED TO AT LEAST 95% MAXIMUM DRY DENSITY WITHIN 2% OPTIMUM MOISTURE (ASTM D 698) WITH THE USE OF MECHANICAL TAMPERS OR VIBRATORY ROLLERS. WATER COMPACTION IS NOT PERMITTED. TYPE I SELECT MATERIAL MAY BE USED AS BACKFILL UPON PRIOR APPROVAL BY THE CITY ENGINEER. MATERIAL CLASSIFICATION SHALL BE PERFORMED ON THE ACTUAL SOIL TO VERIFY THAT SOIL MEETS VDOT SPECIFICATIONS BY A QUALIFIED TESTING LABORATORY AND TEST RESULTS SHALL BE CERTIFIED BY A VIRGINIA REGISTERED PROFESSIONAL ENGINEER. COMPACTION REQUIREMENTS ARE THE SAME AS ABOVE.

   ALL COMPACTION TESTING SHALL BE PERFORMED BY A VDOT-CERTIFIED TECHNICIAN. RESULTS SHALL BE PROVIDED TO THE INSPECTOR WITHIN 24 HOURS OF TESTING COMPLETION. THE COST OF ALL TESTING IS THE RESPONSIBILITY OF THE PERMITTEE.
6. ALL PAVEMENTS SHALL BE RESTORED TO MATCH DEPTHS OF EXISTING SURFACE, BASE, AND AGGREGATE LAYERS. THE ASPHALT SURFACE LAYER SHALL BE A MINIMUM OF 2" THICK AND EXTEND OVER UNDISTURBED BASE A MINIMUM OF 12" ON ALL SIDES. ALL PAVEMENT MATERIALS SHALL MEET VDOT REQUIREMENTS FOR SURFACE MIX (SM-9.5AL, SM-9.5A, OR SM-12.5D), BASE MIX (BM-25), AND STONE AGGREGATE (21A OR 21B). PLANT CERTIFICATION FOR EACH MIX INCORPORATED INTO THE WORK SHALL BE PROVIDED TO THE INSPECTOR. WHEN MATCHING NON-STANDARD MATERIALS, THE INSPECTOR SHALL DETERMINE AN ACCEPTABLE MATERIAL.
7. THE REPAIR SHALL BE RECTANGULAR AND SAW CUT IN STRAIGHT, UNIFORM LINES THAT ARE ALIGNED WITH THE STREET CENTERLINE. WHEN EDGES OF PAVEMENT HAVE BEEN UNDERMINED, PAVEMENT SHALL BE REMOVED TO A NEAT LINE 12" BEYOND THE UNDERMINED AREA. THE FINISHED PATCH SURFACE SHALL BE WITHIN 1/4 INCH AT ANY POINT ACROSS THE PATCH AS IT RELATES TO THE SURROUNDING STREET SURFACE.
8. A FULL COVERAGE TACK COAT IS REQUIRED ON ALL SURFACES THAT WILL CONTACT THE NEW SURFACE LAYER.

12 C-1.3 C-5.2 **CITY DETAIL-UTIL TRENCH REP IN PAVEMENT** NO SCALE

STANDARD FOUNDATION DIMENSIONS					
FLAGPOLE HEIGHT	TUBE LENGTH	A	B	C	D
20'	36"	30"	24"	36"	6"
25'	36"	30"	24"	36"	6"
30'	36"	36"	30"	36"	6"
35'	42"	42"	36"	42"	6"
40'	48"	48"	42"	48"	6"
45'	48"	48"	42"	48"	6"
50'	60"	60"	54"	60"	6"
60'	60"	60"	54"	60"	6"
70'	84"	84"	76"	84"	6"
80'	96"	84"	76"	96"	6"

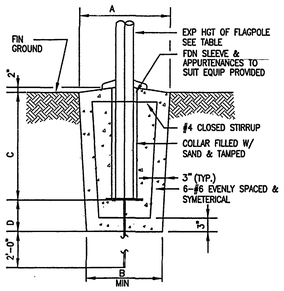

32 C-1.2 C-5.2 **FLAGPOLE FOUNDATION DETIAL** NO SCALE

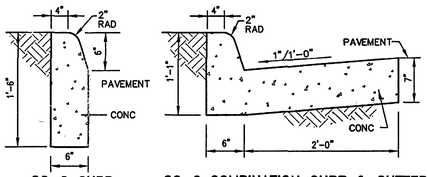

CG-2 CURB CG-6 COMBINATION CURB & GUTTER

36 C-1.2 C-5.2 **CURBING** NO SCALE

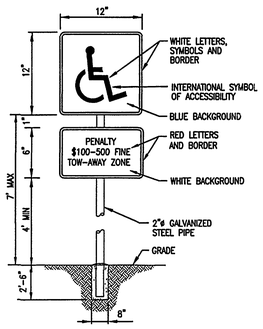

28 C-1.2 C-5.2 **HANDICAPPED PARKING SIGN** NO SCALE

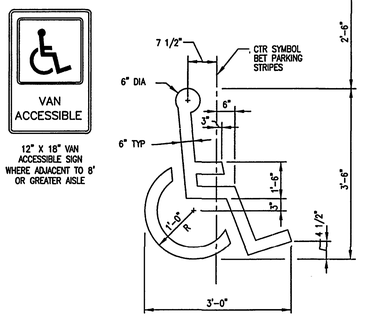

29 C-1.2 C-5.2 **HANDICAPPED SYMBOL** NO SCALE

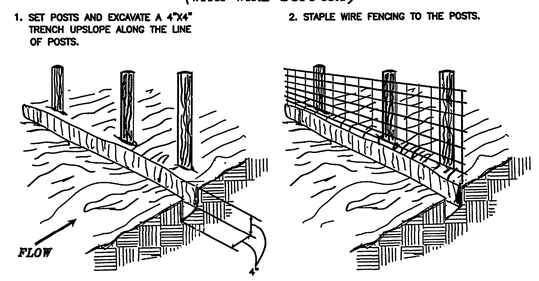

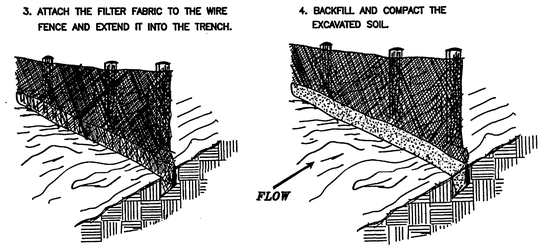

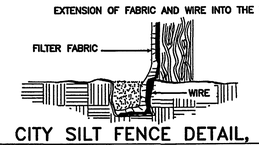

PLATE. 3.05-1

13 C-1.2 C-5.2 **CITY SILT FENCE DETAIL, VAESC STD. 3.05** NO SCALE

CONSTRUCTION OF A SILT FENCE (WITH WIRE SUPPORT)

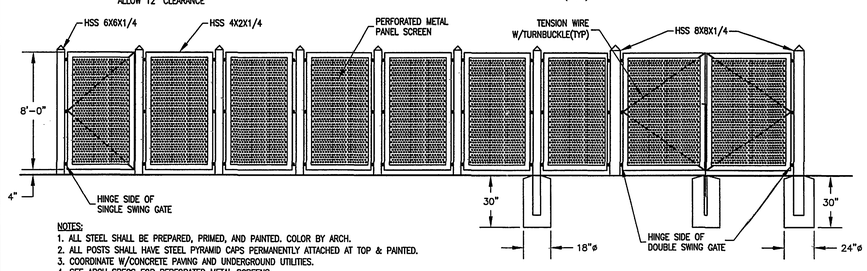

NOTES:
1. ALL STEEL SHALL BE PREPARED, PRIMED, AND PAINTED. COLOR BY ARCH.
2. ALL POSTS SHALL HAVE STEEL PYRAMID CAPS PERMANENTLY ATTACHED AT TOP & PAINTED.
3. COORDINATE W/CONCRETE PAVING AND UNDERGROUND UTILITIES.
4. SEE ARCH SPECS FOR PERFORATED METAL SCREENS.

31 C-1.2 C-5.2 **SCREEN WALL DETAIL** SCALE: NONE

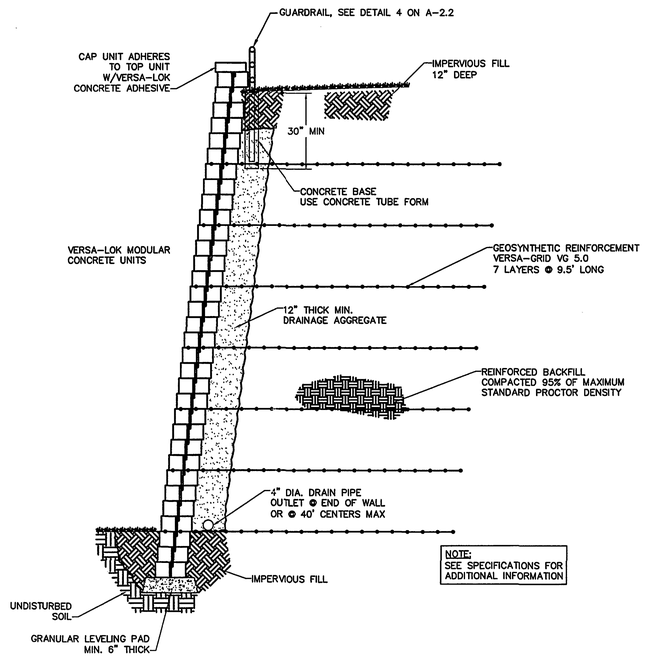

17 S-1.1 C-5.2 **TYPICAL SECTION – SEGMENTAL RETAINING WALL** SCALE: NONE

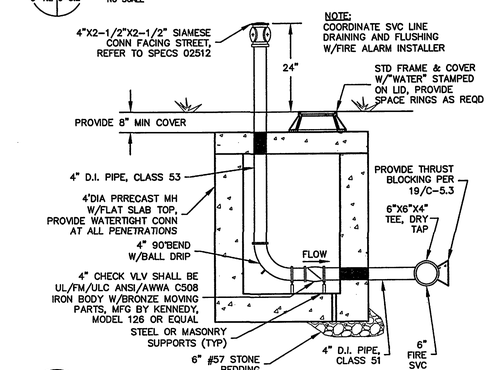

35 C-1.2 C-5.2 **FIRE DEPT CONNECTION DETAIL** NO SCALE

KEY PLAN

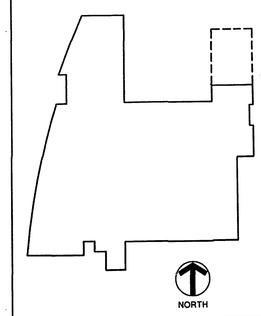

GENERAL NOTES

Cole + Russell Architects
Architecture
Engineering
Interior Design
Landscape Architecture
Construction Administration
537 East Pete Rose Way, Suite 200
Cincinnati, Ohio 45202
(513) 721-8080

SPECTRUM DESIGN
10 CHURCH AVE SE, PLAZA SUITE 1 ROANOKE, VIRGINIA 24011 540.342.6001
ROANOKE • MARION

Roanoke Fire Station & Fire Administration Building

CITY OF ROANOKE
PLAN NUMBER: 6548
BID NUMBER: 05-04-01

SPECTRUM DESIGN PROJECT NO. 03035

COMMONWEALTH OF VIRGINIA
MICHAEL A. RAKES
No. 028199
5/29/05
PROFESSIONAL ENGINEER

DATE	MAY 29, 2005
DESIGN:	MAR
DRAWN:	MF
CHECKED:	MAR

REVISIONS NUMBER DATE

SHEET TITLE

CIVIL - GENERAL DETAILS

C-5.2