EXISTING STORM SEWER STRUCTURE SCHEDULE:

(A) GRATE INLET IN CONC.
TOP=1003.9'

(B) GRATE INLET
TOP=1003.88'
15" RCP INV. OUT=999.78'

(C) STORM MANHOLE
TOP=1001.67'
5.5'X7' ELIPTICAL INV. IN=992.52'
15" RCP INV. IN=995.57'
60" RCP INV. OUT=992.47'

(D) 60" RCP PIPE
INV. IN=992.47'
INV. OUT=990.11'

(E) (2)6'X5' ELIPTICAL CMP
W. INV. IN=984.35'
W. INV. OUT=983.42'
E. INV. IN=984.23'
E. INV. OUT=983.55'

(F) 7'X6' ELIPTICAL CMP
W. INV. IN=985.54'
E. INV. IN=985.23'
W. INV. OUT=984.98'
E. INV. OUT=985.48'

(G) 5'X4' ELIPTICAL CMP
W. INV. IN=982.09'
E. INV. IN=983.29'
W. INV. OUT=980.98'
E. INV. OUT=981.48'

(H) STORM MANHOLE (NO LID)
TOP=1004.98'
15" PVC INV. IN=1000.68'
15" PVC INV. OUT=1000.61'

(I) STORM MANHOLE IN CONC.
TOP=996.48'
10" PVC INV. IN=993.38'
42" CMP INV. IN=986.58'
42" CMP INV. OUT=986.38'

(J) STORM MANHOLE @ CURB INLET
TOP=990.64'
15" RCP INV. IN=985.92'
36" RCP INV. IN=984.84'
42" RCP INV. OUT=984.84'

(K) STORM MANHOLE @ CURB INLET
TOP=990.97'
15" RCP INV. IN=987.35'

(L) GRATE INLET IN CONC.
TOP=1006.55'(NEW TOP=1005.8)
4" PVC INV. IN=1004.40'
10" PVC INV. IN=1003.90'
12" PVC INV. OUT=1003.70'
(NEW PIPE EXIT LOCATION)

(M) GRATE INLET IN CONC.
TOP=1006.16'
10" PVC INV. IN=1004.16'
10" PVC INV. OUT=1004.16'

(N) HEADWALL
30" RCP INV. IN=995.09'

EXISTING SANITARY SEWER STRUCTURE SCHEDULE:

(S1) SEWER MANHOLE
TOP=1009.09'
6" PVC INV. IN=1003.24'
8" PVC INV. OUT=1003.04'
SHELF=1003.74'

(S2) SEWER MANHOLE
TOP=1006.99'
12" INV. IN=991.89'
12" INV. OUT=991.79'
8" PVC KFC INV. IN = 994.79'
8" PVC BANK INV. IN = 1002.99'
8" PVC DENNY'S INV. IN = 995.49'
8" DIP INV. IN=999.91'
SHELF=992.39'

(S3) SEWER MANHOLE
TOP=1004.24'
12" INV. IN 990.34'
12" INV. OUT=990.32'
SHELF=990.86'

(S4) SEWER MANHOLE
TOP=1004.00'

(S5) SEWER MANHOLE
TOP=1004.37'

(S6) SEWER MANHOLE
TOP=994.25'
INV.=988.4'
(PER W.V.W.A. GIS GIS)
G.C. TO CONFIRM PRIOR
TO ANY CONSTRUCTION

(S7) SEWER MANHOLE
TOP=993.46'
INV.=987.66'
(PER W.V.W.A. GIS GIS)
G.C. TO CONFIRM PRIOR
TO ANY CONSTRUCTION
(NEW INV. IN=988.16)

(S8) SEWER MANHOLE
TOP=994.51'
INV.=986.51'
(PER W.V.W.A. GIS GIS)
G.C. TO CONFIRM PRIOR
TO ANY CONSTRUCTION

(S9) SEWER MANHOLE
TOP=983.00'

(S10) SEWER MANHOLE
TOP=991.34'
12" PVC INV. IN=980.97'
12" PVC INV. OUT=980.89'
SHELF=981.49'

(S11) SEWER MANHOLE
TOP=992.76'
12" PVC INV. IN=982.95'
12" PVC INV. OUT=982.85'
SHELF=983.50'

(S12) SEWER MANHOLE
TOP=997.30'
12" PVC INV. IN=987.05'
12" PVC INV. IN=986.88'
12" PVC INV. OUT=986.85'
SHELF=987.58'

(S13) SEWER MANHOLE (PRIVATE)
TOP=1005.64'
PARTIALY PAVED OVER
(NOT ACCESSIBLE)

(S14) SEWER CLEANOUT
TOP=1006.35'
NOT ACCESSIBLE

(S15) SEWER CLEANOUT
TOP=1005.95'
NOT ACCESSIBLE

(S16) SEWER MANHOLE
TOP=1007.49'
4" PVC INV. IN=1003.14'
4" PVC INV. OUT=1003.09'
6" PVC INV. IN=1001.94'
6" PVC INV. OUT=1001.94'
(MODIFY LOCATION OF EXIT LATERAL)

STORM STRUCTURE SCHEDULE:

1. 213 LF OF 6" TYPE S HDPE ROOFLEADER W/TRAFFIC BEARING CO'S & BENDS AS REQ'D(MIN. SLOPE 2%) SWQ MH W/ENVIROHOOD STR. ON OUTLET SIDE OF MH MH-TOP=1006.0 INV. IN.=1001.56 INV. OUT=1001.46 BOTTOM OF STR.=998.46 INV. IN=1003.4 INV. OUT=999.5 (STR. #2)
2. VDOT ST'D DI-1 W/FLEXSTORM 62XLHD TOP=1004.5 INV. IN=999.5(STR. #1) INV. OUT=999.4
3. 131 LF OF 18" TYPE S HDPE PIPE AT 2.0%
4. VDOT ST'D DI-7 TYPE 3 GRATE W/FLEXSTORM 62XLHD (5' DIAMETER MANHOLE) TOP=1002.5 INV. IN=999.5 (STR. #30) INV. IN=999.5 (STR. #31) INV. IN=998.5 (STR. #13) INV. IN=996.78 (STR. #3) INV. IN=995.78 (STR. #12) INV. OUT=995.68
5. 111 LF OF 24" TYPE S HDPE PIPE AT 0.75%
5A. VDOT ST'D MH-2 TOP=1003.8 INV. IN=994.85 (STR. #4) INV. IN=998.22 (STR. #5B) INV. OUT=994.75
5B. 24 LF OF 15" TYPE S HDPE PIPE AT 2%
6. VDOT ST'D DI-1 W/FLEXSTORM 62XLHD TOP=1002.45 INV. OUT=998.7
7. 94 LF OF 24" TYPE S HDPE PIPE AT 1.3%
8. VDOT ST'D MH-2 W/FLEXSTORM 62XLHD TOP=1004.1 INV. IN=993.5 INV. OUT=993.4 (5' 36" STUB OUT TO STR. #24) INV. OUT=993.2 TO SWM BULKHEAD
9. VDOT ST'D DI-1 W/FLEXSTORM 62XLHD TOP=1003.41 INV. OUT=1000.41
9A. 69 LF OF 12" TYPE S HDPE PIPE AT 2.99%
9B. VDOT ST'D MH-2 TOP=1003.35 INV. IN=998.35 INV. OUT=998.25
10. 38 LF OF 12" TYPE S HDPE PIPE AT 4.34%
11. VDOT ST'D DI-1 DROP MANHOLE W/FLEXSTORM 62XLHD TOP=1002.85 INV. IN=996.60 INV. OUT=996.50
12. 88 LF OF 15" TYPE S HDPE PIPE AT 0.82%
13. 35 LF OF 8" TYPE S HDPE ROOFLEADER W/TRAFFIC BEARING CO'S (MIN. SLOPE 2%) INV. IN=999.5 (FROM U.G. FUEL R.D.) INV. OUT=998.8(STR. #4)
14. 14 LF OF 12" TYPE S HDPE ROOFLEADER (MIN. SLOPE 2%) INV. IN=1001.08 INV. OUT=1000.8(STR. #15)
15. VDOT ST'D DI-1 TOP=1004.7 INV. IN=1000.8 INV. OUT=1000.7
16. 34 LF OF 15" N-12 HDPE PIPE AT 2%
17. VDOT ST'D DI-1 TOP=1005.0 INV. IN=1000.02 (STR. #16) INV. IN=1002.00 (STR. #29) INV. OUT=999.92
18. 116 LF OF 15" TYPE S HDPE PIPE AT 1.5% (PROVIDE TEE 12"x15" CONNECTIONS FOR ROOF LEADERS AS REQUIRED)
19. VDOT ST'D DI-1 TOP=1005.2 INV. IN=998.18 (STR. #18) INV. IN=1001.7 (STR. #28) INV. OUT=998.08
20. 100 LF OF 15" TYPE S HDPE PIPE AT 1.5% (PROVIDE TEE 12"x15" CONNECTIONS FOR ROOF LEADERS AS REQUIRED)
21. VDOT ST'D DI-1 TOP=1004.6 INV. IN=996.58 (STR. #20) INV. IN=1000.1 (STR. #26) INV. OUT=996.48
22. 80 LF OF 18" TYPE S HDPE PIPE AT 1.5%
23. VDOT ST'D DI-1 TOP=1004.5 INV. IN=995.28 INV. OUT=995.18 BOTTOM OF STR. 993.18 (MH W/ENVIROHOOD STR. ON 18" OUTLET PIPE)
24. (2)115 LF OF 84" ALLUMINIZED CMP PIPE FOR S.W.M. AT 1% (SEE LANE DETAIL) (1 ACCESS PORT W/MH COVER (TOP=1004.25) PIPE SHALL HAVE (2) 36" CMP STUB OUT & (1) 18" STUB OUT LOCATION TO STR. 32 INV. IN=992.15 INV. OUT=991.0 DA = 5.79 AC.
25. 42 LF OF 12" TYPE S HDPE ROOFLEADER (MIN. SLOPE 2%)
26. 123 LF OF 12" TYPE S HDPE ROOFLEADER (MIN. SLOPE 2%)
27. TRUCK DOCK GRATE INLET INV. IN=1001.98
28. 14 LF OF 10" TYPE S HDPE PIPE AT 2.0% INV. IN=1001.98 INV. OUT=1001.7
29. 34 LF OF 12" TYPE S HDPE PIPE AT 5%
30. FILTERRA CURB TYPE S.W.Q. UNIT (8'x6') TOP=1003.5 INV. OUT =1000.0 (4" SDR-35) DA = 0.30 AC.
31. FILTERRA CURB TYPE S.W.Q. UNIT (4'x4') TOP=1003.5 INV. OUT =1000.0 (4" SDR-35) DA = 0.06AC.
32A. 37 LF OF 30" CMP PIPE AT 1.08%
32. VDOT ST'D DI-1 (STEEL PLATE W/9.5" ORIFICE) TOP=998.5 INV. IN=990.6 INV. OUT=990.5
33. 25 LF OF 18" TYPE S HDPE PIPE AT 4.6%
34. VDOT ST'D DI-3B (12' THROAT) W/FLEXSTORM 62XLHD TOP=995.9 INV. IN=989.35 INV. OUT=987.0 MH TO TIE DIRECTLY TO STR #36
35. VDOT ST'D DI-3B (12' THROAT) W/FLEXSTORM 62XLHD TOP=995.6 INV. OUT=989.15
36. 67.5 LF OF 10' WIDE & 5' TALL BOX CULVERT AT 1.41% W/HEADWALLS & WINGWALLS INV. IN=984.45 INV. OUT=983.5

SANITARY SEWER SCHEDULE:

FROM	INV IN	TO	INV OUT	
H	1000.45	G	1000.1	17' OF 6" SDR-35 PVC PIPE @ 2.08%
G	1000.1	F	996.79	159' OF 6" SDR-35 PVC PIPE @ 2.08%
F	996.79	A	995.0	12' OF 6" SDR-35 PVC PIPE @ 9.58%
E	1000.4	C	999.8	28' OF 8" SDR-35 PVC PIPE @ 2.1%
S16	1001.94	D	1001.44	40' OF 8" SDR-35 PVC PIPE @ 1.25%
D	1001.34	C	999.8	191' OF 8" SDR-35 PVC PIPE @ 0.8%
C	999.8	B	998.34	136' OF 8" SDR-35 PVC PIPE @ 1.0%
B	998.24	A	994.75	120' OF 8" SDR-35 PVC PIPE @ 2.9%
A	994.65	AA	990.25	42' OF 8" SDR-35 PVC PIPE @ 10.5%
AA	988.38	S7	987.66	26' OF 8" SDR-35 PVC PIPE @ 2.75%

SANITARY STRUCTURE SCHEDULE:

*ALL S.S. MH'S SHALL HAVE STANDARD TOPS *
*ALL C.O.'S LOCATED IN PAVEMENT OR SIDEWALK SHALL HAVE * TRAFFIC BREARING TOPS

(AA) S.S. MANHOLE TOP=994.0 INV. IN=989.88 INV. OUT=988.38
(S7) S.S. MANHOLE TOP=998.75 INV. IN=994.75 INV. OUT=994.65
(B) S.S. MANHOLE TOP=1005.56 INV. IN=998.34 INV. OUT=998.24
(C) S.S. MANHOLE TOP=1005.95 INV. IN=999.8 INV. OUT=999.7
(D) S.S. MANHOLE TOP=1007.95 INV. IN=1001.44 INV. OUT=1001.34
(E) S.S. CO TRAFFIC BEARING TOP=1006.4 INV. OUT=1000.4
(F) S.S. CO TRAFFIC BEARING TOP=998.65 INV. OUT=996.15
(G) S.S. CO TRAFFIC BEARING TOP=1003.8 INV. OUT=999.35
(H) S.S. CO TRAFFIC BEARING TOP=1003.95 INV. OUT=999.8
(S16) SEWER MANHOLE TOP=1007.49' 4" PVC INV. IN=1003.14' 4" PVC INV. OUT=1003.09' 6" PVC INV. IN=1001.94' 6" PVC INV. OUT=1001.94' (MODIFY LOCATION OF EXIT LATERAL)
(S7) SEWER MANHOLE TOP=993.46' INV.=987.66' (PER W.V.W.A. GIS GIS) G.C. TO CONFIRM PRIOR TO ANY CONSTRUCTION (NEW INV. IN=987.66)

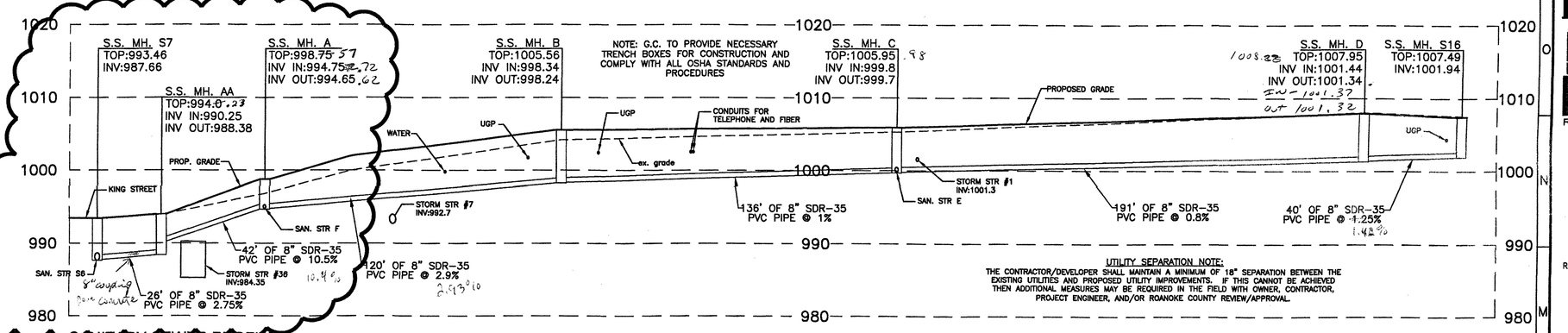

SANITARY SEWER PROFILE
1"=30' HORIZONTAL
1"=10' VERTICAL

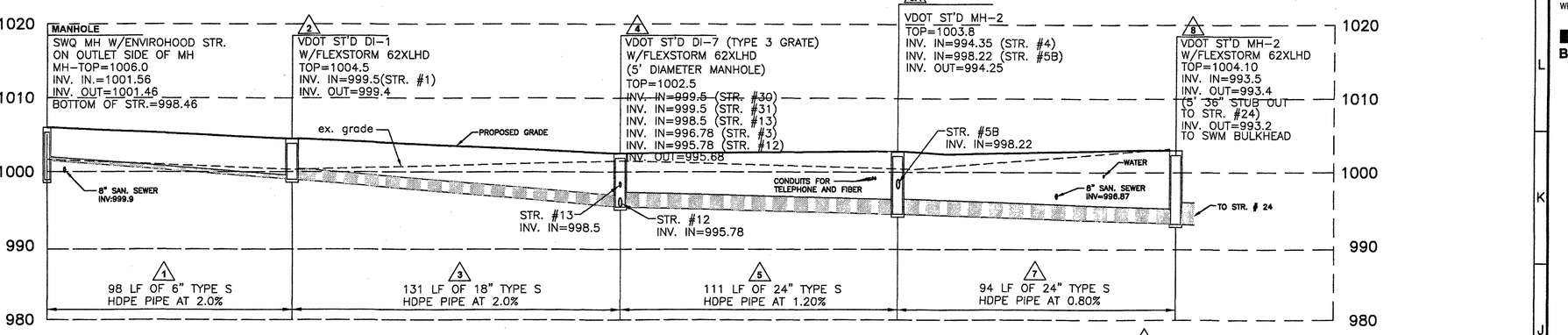

STORM SEWER PROFILE (ROOF DRAIN - 8)
1"=30' HORIZONTAL
1"=10' VERTICAL

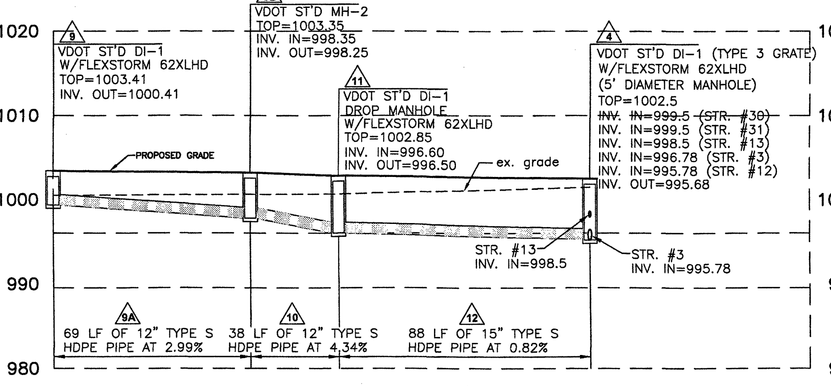

STORM SEWER PROFILE (9-4)
1"=30' HORIZONTAL
1"=10' VERTICAL

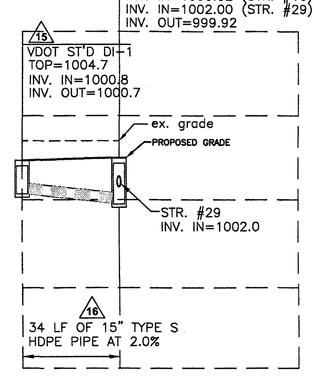

STORM SEWER PROFILE (15 - 17)
1"=30' HORIZONTAL
1"=10' VERTICAL

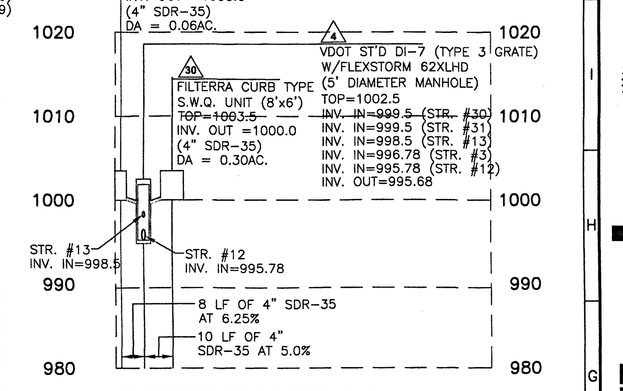

STORM SEWER PROFILE (30,31)
1"=30' HORIZONTAL
1"=10' VERTICAL

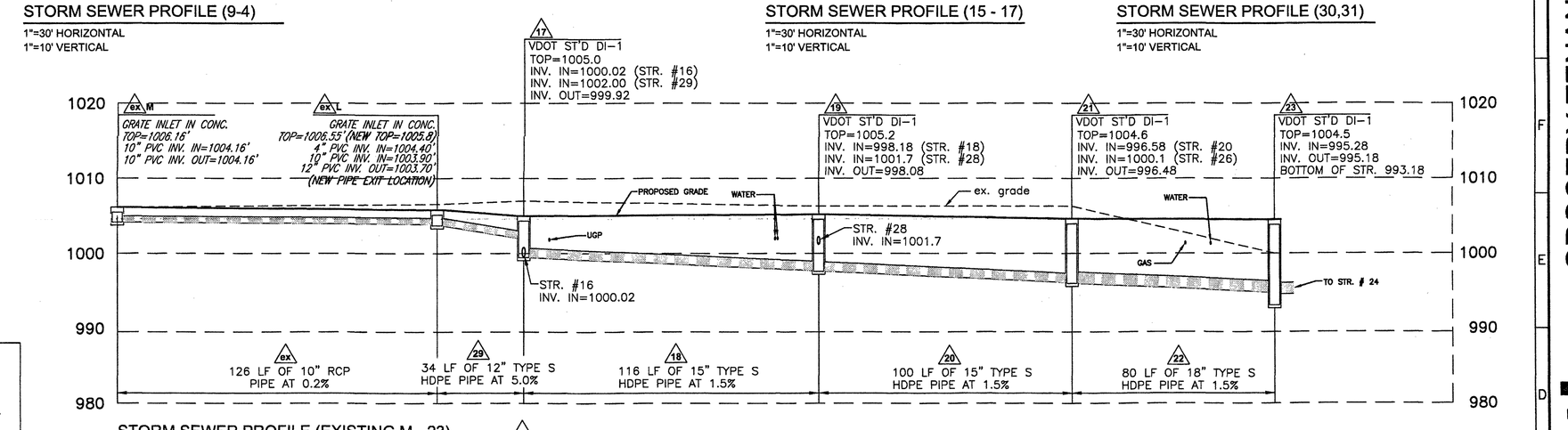

STORM SEWER PROFILE (EXISTING M - 23)
1"=30' HORIZONTAL
1"=10' VERTICAL

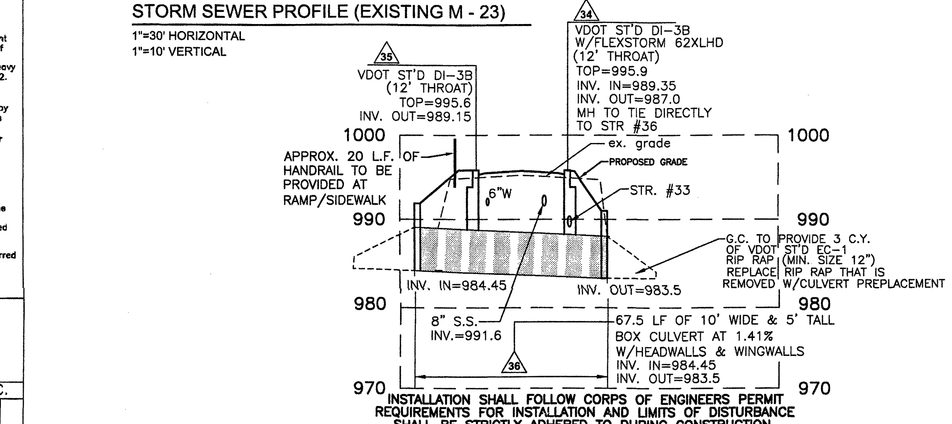

INSTALLATION SHALL FOLLOW CORPS OF ENGINEERS PERMIT REQUIREMENTS FOR INSTALLATION AND LIMITS OF DISTURBANCE SHALL BE STRICTLY ADHERED TO DURING CONSTRUCTION

STORM SEWER PROFILE (36)
1"=30' HORIZONTAL
1"=10' VERTICAL

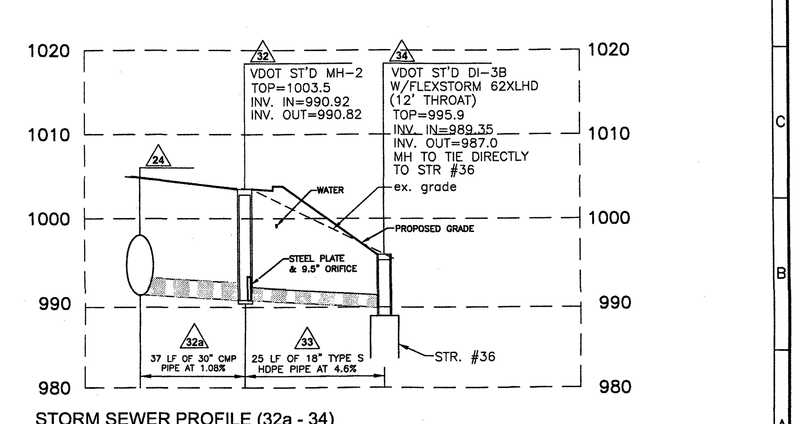

STORM SEWER PROFILE (32a - 34)
1"=30' HORIZONTAL
1"=10' VERTICAL

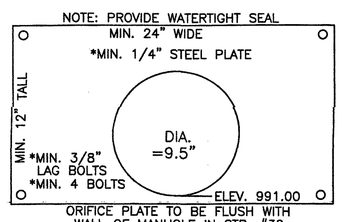

ORIFICE PLATE DETAIL
NO SCALE

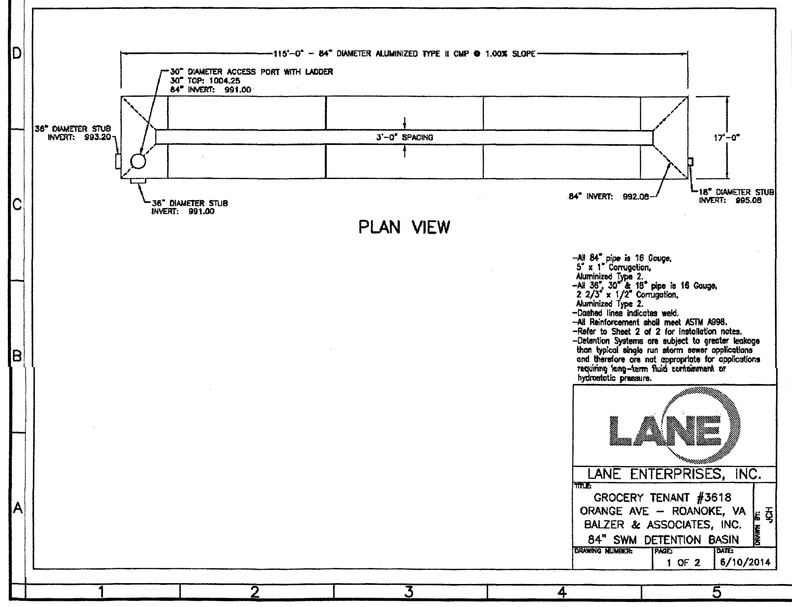

PLAN VIEW

LANE ENTERPRISES, INC.
TITLE: GROCERY TENANT #3618
ORANGE AVE – ROANOKE, VA
BALZER & ASSOCIATES, INC.
84" SWM DETENTION BASIN
DRAWING NUMBER 1 OF 2 DATE 6/10/2014

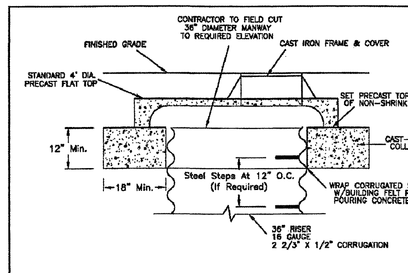

MANWAY ACCESS DETAIL

TABLE 1
Minimum Spacing Between Pipe

PIPE SPAN (IN)	MINIMUM SPACING (IN)
Up to 45"	24"
48" to 66"	½ Pipe Span
72" to 144"	36"

* Spacings shown are based on standard backfill materials, placement and compaction practices. Minimums can be increased by the manufacturer, engineer, installer of materials, or as directed by the design engineer.

TABLE 2
Guidelines for Minimum Cover for Heavy Construction Equipment

PIPE SPAN (IN)	Minimum Cover (ft) for Indicated Axle Loads (kips)*			
	18–50	50–75	75–110	110–150
12–42	2.0	2.5	3.0	3.0
48–72	3.0	3.0	3.5	4.0
78–120	3.0	3.5	4.0	4.0
126–144	3.5	4.0	4.5	4.5

* Minimum cover may vary, depending on local conditions. The contractor must provide the additional cover required to avoid damage to the pipe. Minimum cover is measured from the top of the pipe to the top of the maintained construction roadway surface.

INSTALLATION NOTES

1. Minimum spacing between pipe shall be as shown in Table 1 to conform with ASTM A798.
2. Granular material used for pipe bedding and backfill shall conform to ASTM A798, Section 9.
3. Placement of bedding and backfill material for pipe shall meet requirements of ASTM A798, Section 10.
4. Minimum cover for H20/H25 loading, measured from top of pipe to bottom of flexible pavement or top of rigid pavement,shall be the greater of 12" or 1/8 pipe diameter or span.
5. Minimum cover over the top of the pipe for heavy construction loads shall be as shown in Table 2.
6. Length of riser pipe must be field cut to final grade by contractor.
7. Length of attached pipe stubs are determined by Lane Enterprises based on fabrication standards or shipping criteria.
8. Manholes or catch basins placed over CSP riser pipe shall be installed by the contractor in a manner that avoids wheel loads on riser and system pipe. (See Detail)
9. Upper portion of riser pipe shall be installed with a sleeve around the OD of the pipe. The sleeve shall be sufficiently rigid so as to avoid deformation when concrete is placed against the sleeve. Sleeve shall allow minimum settlement of concrete collar without any load being applied to riser pipe.
10. Manhole or catch basin frame shall be sized so that wheel load applied to frame is transferred to concrete collar around riser.

LANE ENTERPRISES, INC.
TITLE: GROCERY TENANT #3618
ORANGE AVE – ROANOKE, VA
BALZER & ASSOCIATES, INC.
72" SWM DETENTION BASIN
DRAWING NUMBER 2 OF 2 DATE 5/9/2014

BALZER AND ASSOCIATES INC
REFLECTING TOMORROW
www.balzer.cc
Roanoke
New River Valley
Richmond
Staunton
Harrisonburg
RESIDENTIAL LAND DEVELOPMENT ENGINEERING
SITE DEVELOPMENT ENGINEERING
LAND USE PLANNING & ZONING
LANDSCAPE ARCHITECTURE
LAND SURVEYING
ARCHITECTURE
STRUCTURAL ENGINEERING
TRANSPORTATION ENGINEERING
ENVIRONMENTAL & SOIL SCIENCE
WETLAND DELINEATIONS & STREAM EVALUATION
Balzer and Associates, Inc
1208 Corporate Circle
Roanoke, VA 24018
540-772-9580
FAX 540-772-8050
COMMONWEALTH OF VIRGINIA
CHRISTOPHER P. BURNS
Lic. No.047338
12/7/14
PROFESSIONAL ENGINEER

GROCERY TENANT
STORE # 3618
PROFILES
CITY OF ROANOKE, VIRGINIA

DRAWN BY	BTC
DESIGNED BY	BTC
CHECKED BY	CPB
DATE	05/09/2014
SCALE	N/A

REVISIONS:
6/10/2014
6/24/2014
8/13/2014 F.R. #1
8/27/2014 F.R. #2
10/17/2014 F.R. #4
10/20/2014 F.R. #5
12/7/2014 F.R. #6

SHEET NO.
C7
JOB NO. R1400021.00