MANHOLE FRAME AND COVER

RICHARD FOUNDRY CO. DESIGN NO. B-1444,
DEWEY BROS., INC. MH-RCR-56, OR EQUIVALENT

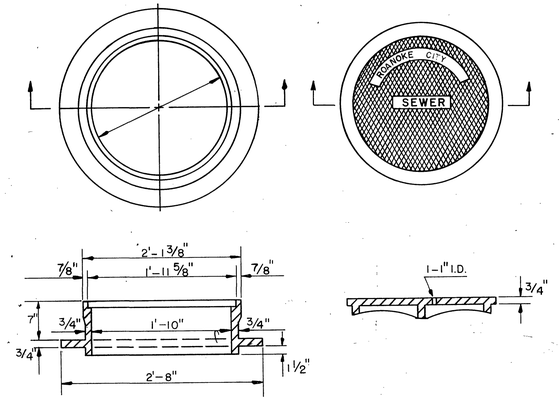

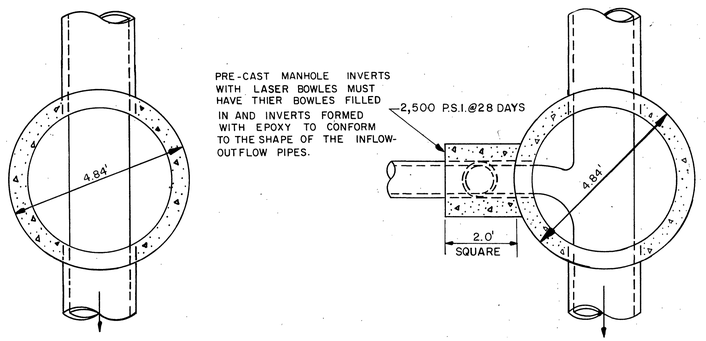

SECTION A-A
STANDARD MANHOLE

SECTION B-B
DROP MANHOLE

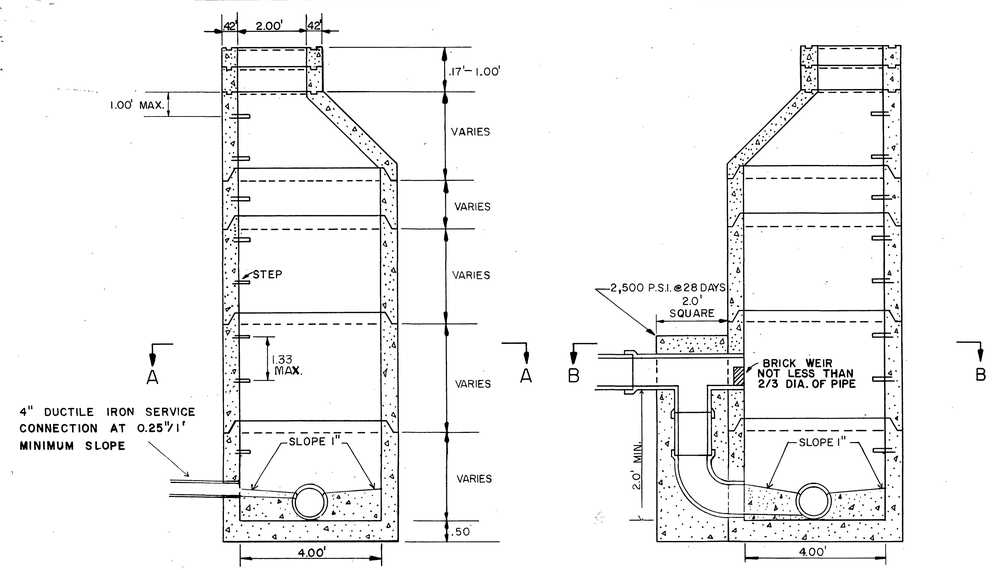

STANDARD MANHOLE

DROP MANHOLE

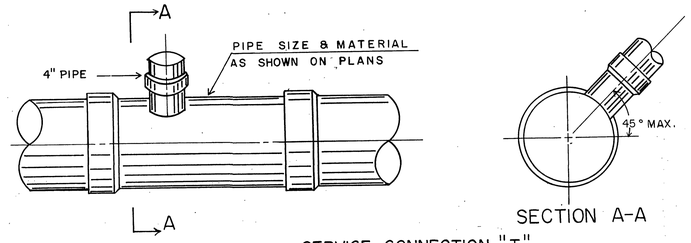

SERVICE CONNECTION "T"

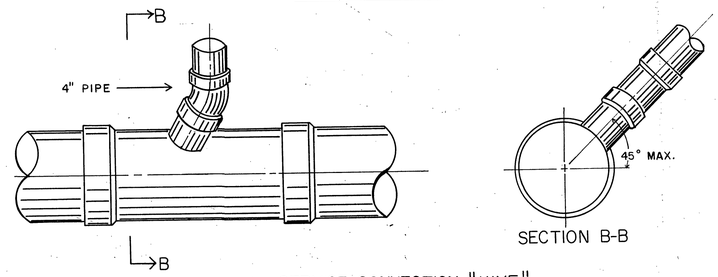

SERVICE CONNECTION "WYE"

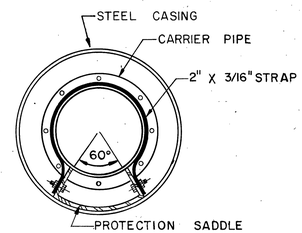

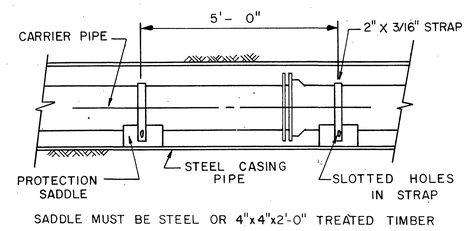

BORING AND CASING

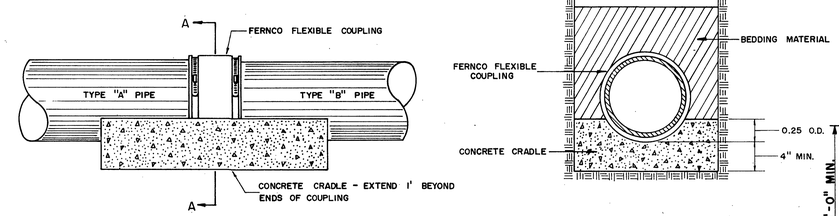

JOINING DISSIMILAR PIPE

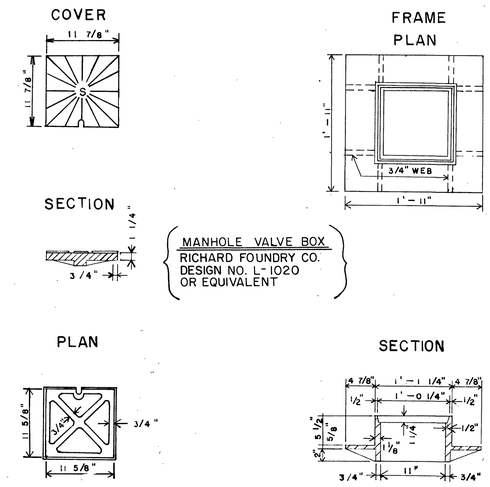

CLEAN OUT FRAME AND COVER

SCALE: 1" = 1'-0"

NOTES:

1. IN TRAFFIC AREAS INSTALLATION OF A TRAFFIC BEARING BOX REQUIRED.
2. ALL PIPE & FITTINGS SHALL BE OF SIMILAR MATERIAL.
3. 4-INCH CLEAN-OUT STACKS MAY BE USED ON 6-INCH LATERALS. CHANGE OF SIZE TO BE MADE BY USE OF 6"X4" WYE.
4. NO BENDS ARE ALLOWED IN THE LATERAL FROM THE MAIN TO THE CLEAN-OUT STACK WYE.
5. ALL MAIN LINE TAPS WILL BE PERFORMED BY ROANOKE CITY PERSONNEL.
6. DROP CONNECTIONS NOT ALLOWED ON CLEAN-OUT STACK.

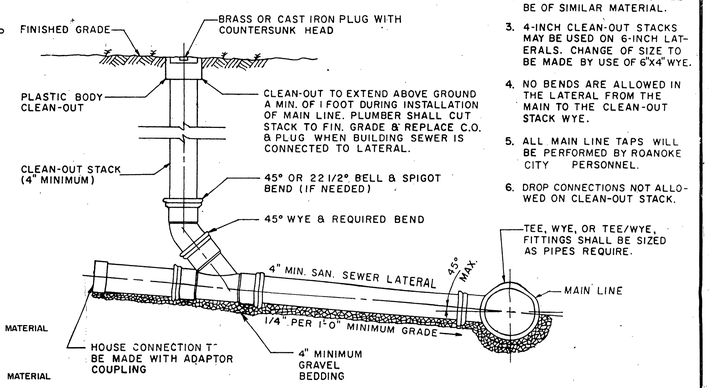

SANITARY SEWER LATERAL

SCALE: 1" = 1'-0"

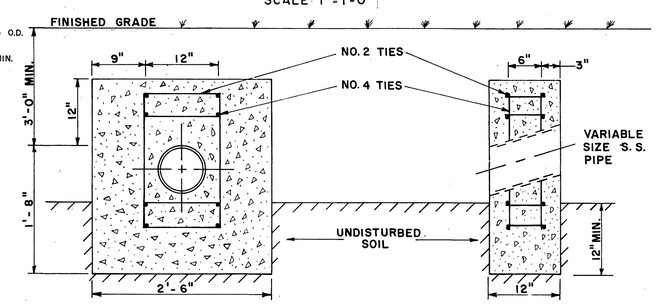

ANCHOR BLOCK

SCALE: 1" = 1'-0"

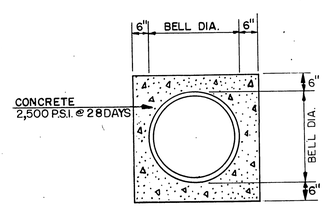

CONCRETE ENCASED PIPE

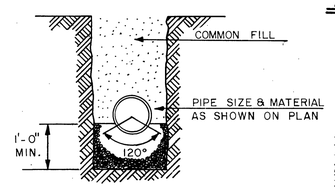

STONE CRADLE

HICKORY WOODS, PHASE II **U.S. ROUTE 460** **ROANOKE, VIRGINIA**	
DESIGNED DRAWN CHECKED	**SANITARY SEWER DETAIL**
T.P. PARKER & SON ENGINEERS & SURVEYORS LTD. SALEM, VIRGINIA	SCALE: AS SHOWN DATE: 10-13-89 W.O. NO.: 89-1238 N.B.: H.W. # 4