1. SETTER TO BE FORD U272-15W-1133 OR APPROVED EQUAL.
2. SADDLES MUST BE USED WITH ALL PLASTIC & CLASS 50 DUCTILE IRON PIPE. SERVICE SADDLES SHALL BE USED IN ACCORDANCE WITH SECTION 2983 OF THE WATER STANDARDS. SERVICE SADDLES FOR PLASTIC PIPE SHALL BE: POWERSEAL 3417, OR 3412AS, ROMAC 202S, OR 306, OR FORD METER F292 OR F293S. FOR DUCTILE IRON PIPE USE THE ABOVE OR POWERSEAL 3413, ROMAC 202 OR FORD METER F202.
3. METER BOX MUST BE CARSON/MID-STATES-STATES PLASTICS, INC. PLASTIC BOX WITH FORD A32-T (ELECTRONIC READ LID) OR A. Y. McDONALD MODEL 74U32C-TC CAST IRON BASE & COVER OR APPROVED EQUAL. COMPLETE METER SETTING DETAIL SHALL BE APPROVED BY A. Y. McDONALD. REMOTE READING UNIT SHALL BE CARSON/MID STATES PLASTICS F420 OR EQUIVALENT AND LID SHALL BE FORD METER BOX C324 OR EQUIVALENT.
4. WHENEVER SIDEWALK EXISTS OR IS PROPOSED, MODIFY METER LOCATION AS DIRECTED.
5. CORPORATION STOP MUST BE FORD F1000-4-G OR APPROVED EQUAL.

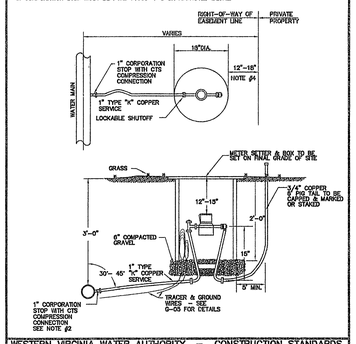

WESTERN VIRGINIA WATER AUTHORITY – CONSTRUCTION STANDARDS

REVISION	DATE	TYPE "A" SINGLE RESIDENTIAL WATER SERVICE (LINE PRESSURE UNDER 80 PSI)	W-01
07/01/04			
03/01/06			

1. THIS CONFIGURATION REQUIRED WHEN WATER PRESSURE AT THE WATER MAIN IS BETWEEN 80 AND 120 PSI.

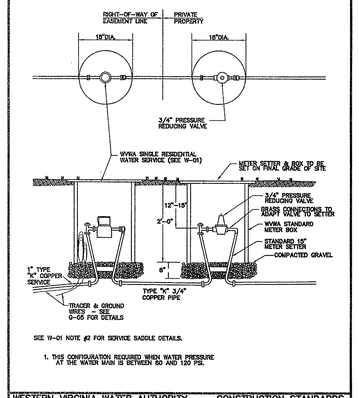

SIZE W-01 NOTE #2 FOR SERVICE SADDLE DETAILS.

WESTERN VIRGINIA WATER AUTHORITY – CONSTRUCTION STANDARDS

REVISION	DATE	TYPE "B" SINGLE RESIDENTIAL WATER SERVICE (LINE PRESSURE UNDER 80 TO 120 PSI)	W-02
07/01/04			
03/01/06			

1. SETTER TO BE FORD TR60-15W-113 OR APPROVED EQUAL.
2. PRESSURE REDUCING VALVE TO BE WATTS 500 OR APPROVED EQUAL.
3. S BAR TO BE ST-2-3/4SH-01 WITH PRV OR EQUAL.
4. METER BOX MUST BE CARSON/MID-STATES PLASTICS, INC. PLASTIC BOX WITH FORD A32-T (ELECTRONIC READ LID) OR A. Y. McDONALD MODEL 74U32C-TC CAST IRON BASE & COVER OR APPROVED EQUAL.
5. THIS CONFIGURATION IS REQUIRED WHEN THE WATER PRESSURE AT THE WATER MAIN EXCEEDS 120 PSI. SELF-CONTAINED PRESSURE REDUCING VALVE WITH PRESSURE RELIEF VALVE OR PRESSURE RELIEF VALVE AS SHOWN ON DRAWING.

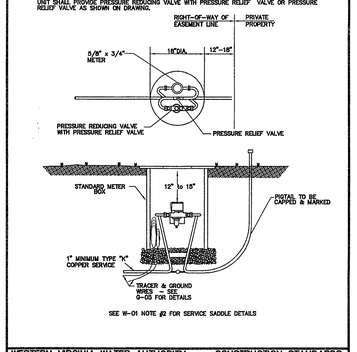

SEE W-01 NOTE #2 FOR SERVICE SADDLE DETAILS

WESTERN VIRGINIA WATER AUTHORITY – CONSTRUCTION STANDARDS

REVISION	DATE	TYPE "C" SINGLE RESIDENTIAL SERVICE FOR HIGH PRESSURE (LINE PRESSURE OVER 120 PSI)	W-03
07/01/04			
03/01/06			

1. SETTER TO BE FORD U272-15W-1133 OR APPROVED EQUAL.
2. METER BOX MUST BE CARSON/MID-STATES PLASTICS, INC. PLASTIC BOX WITH FORD A32-T (ELECTRONIC READ LID) OR A. Y. McDONALD MODEL 74U32C-TC CAST IRON BASE & COVER OR APPROVED EQUAL.
3. CORPORATION STOP MUST BE FORD F1000-4-G OR APPROVED EQUAL.

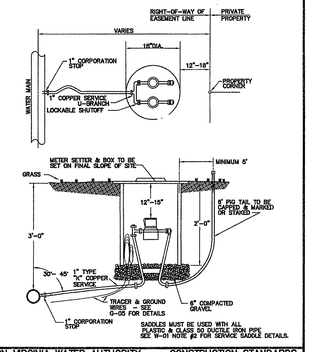

WESTERN VIRGINIA WATER AUTHORITY – CONSTRUCTION STANDARDS

REVISION	DATE	DOUBLE RESIDENTIAL WATER SERVICE	W-04
07/01/04			
03/01/06			

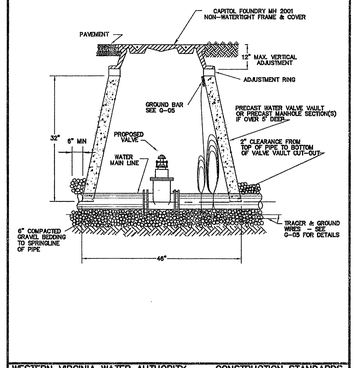

WESTERN VIRGINIA WATER AUTHORITY – CONSTRUCTION STANDARDS

REVISION	DATE	WATER LINE VALVE INSTALLATION	W-08
07/01/04			
03/01/06			

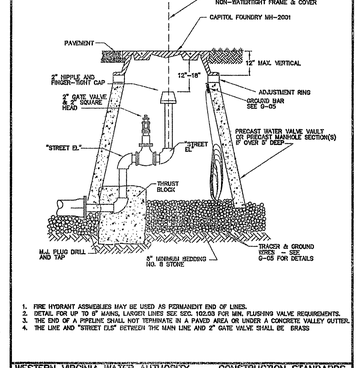

1. FIRE HYDRANT ASSEMBLIES MAY BE USED AS PERMANENT END OF LINES.
2. DETAIL FOR UP TO 6" MAINS, LARGER LINES SEE S20. 100.03 FOR MIN. FLUSHING VALVE REQUIREMENTS.
3. THE END OF A PIPELINE SHALL NOT TERMINATE IN A PAVED AREA OR UNDER A CONCRETE VALLEY GUTTER.
4. THE LINE AND "STREET ELL" BETWEEN THE MAIN LINE AND 2" GATE VALVE SHALL BE BRASS

WESTERN VIRGINIA WATER AUTHORITY – CONSTRUCTION STANDARDS

REVISION	DATE	PERMANENT END OF LINE	W-09
07/01/04			
03/01/06			

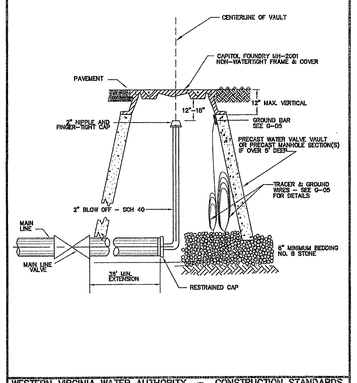

WESTERN VIRGINIA WATER AUTHORITY – CONSTRUCTION STANDARDS

REVISION	DATE	BLOW-OFF ASSEMBLY FOR MAIN LINE TEMPORARY TERMINATION	W-10
07/01/04			
03/01/06			

1. FIRE HYDRANTS MAY BE USED AT LOWPOINTS IN PLACE OF BLOW-OFFS WHERE IT IS DEMONSTRATED THAT A MINIMUM FLUSHING VELOCITY OF 4 FT/S IS PROVIDED.
2. LINE AND "STREET ELL" BETWEEN CORPORATION STOP AND 2" GATE VALVE SHALL BE BRASS

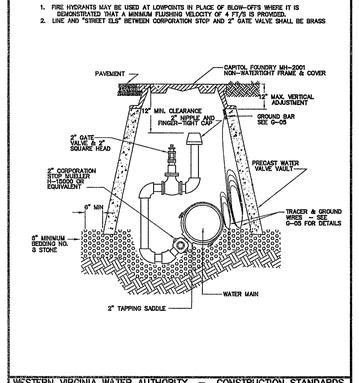

WESTERN VIRGINIA WATER AUTHORITY – CONSTRUCTION STANDARDS

REVISION	DATE	IN-LINE BLOW-OFF ASSEMBLY	W-11
07/01/04			
03/01/06			

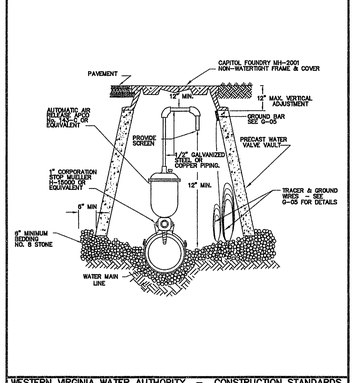

WESTERN VIRGINIA WATER AUTHORITY – CONSTRUCTION STANDARDS

REVISION	DATE	AUTOMATIC AIR RELEASE ASSEMBLY	W-12
07/01/04			
03/01/06			

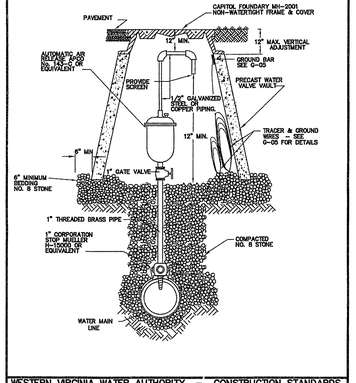

WESTERN VIRGINIA WATER AUTHORITY – CONSTRUCTION STANDARDS

REVISION	DATE	AUTOMATIC AIR RELEASE ASSEMBLY FOR DEEP WATER LINES	W-13
07/01/04			
03/01/06			

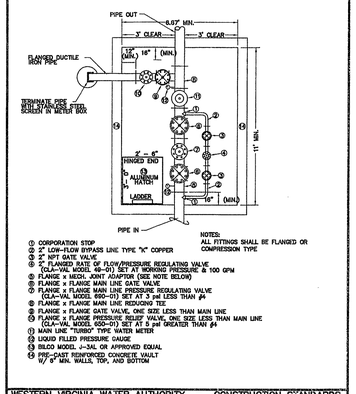

NOTES:
ALL FITTINGS SHALL BE FLANGED OR COMPRESSION TYPE

① CORPORATION STOP
② 2" LOW-FLOW BYPASS LINE TYPE "K" COPPER
③ 2" NPT GATE VALVE
④ 2" FLANGED RATE OF FLOW PRESSURE REGULATING VALVE (CLA-VAL MODEL 60-01) SET AT 3 psi LESS THAN 80 PSI WORKING PRESSURE & 100 GPM
⑤ FLANGE x MECH. JOINT ADAPTOR (SEE NOTE BELOW)
⑥ FLANGE x FLANGE MAIN LINE GATE VALVE
⑦ FLANGE x FLANGE MAIN LINE PRESSURE REGULATING VALVE (CLA-VAL MODEL 690-01) SET AT 3 psi LESS THAN ④
⑧ FLANGE x FLANGE MAIN LINE REDUCING TEE
⑨ FLANGE x FLANGE GATE VALVE, ONE SIZE LESS THAN MAIN LINE
⑩ FLANGE x FLANGE PRESSURE RELIEF VALVE, ONE SIZE LESS THAN MAIN LINE (CLA-VAL MODEL 650-01) SET AT 5 psi GREATER THAN ④
⑪ MAIN LINE "TURBO" TYPE WATER METER
⑫ LIQUID FILLED PRESSURE GAUGE
⑬ BILCO MODEL J-3AL OR APPROVED EQUAL
⑭ PRE-CAST REINFORCED CONCRETE VAULT W/ 6" MIN. WALLS, TOP, AND BOTTOM

WESTERN VIRGINIA WATER AUTHORITY – CONSTRUCTION STANDARDS

REVISION	DATE	MAIN LINE PRESSURE REDUCING VALVE ASSEMBLY	W-14
07/01/04			
03/01/06			

1. TO BE USED WHEN STANDARD VAULT CONSTRUCTION EXCEEDS MAXIMUM VERTICAL HEIGHT OF 5'.
2. BEDDING SHALL BE PLACED AS REQUIRED BY PIPE MANUFACTURER'S WRITTEN INSTALLATION INSTRUCTIONS.
3. IN ORDER TO LOCATE PVC WATER PIPE, 12 GAUGE SOLID COPPER WIRE SHALL BE LAID WITH PIPE (SEE DETAIL).

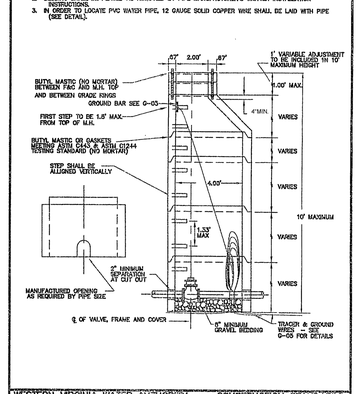

WESTERN VIRGINIA WATER AUTHORITY – CONSTRUCTION STANDARDS

REVISION	DATE	ALTERNATE VALVE VAULT (MANHOLE)	W-15
07/01/04			
03/01/06			

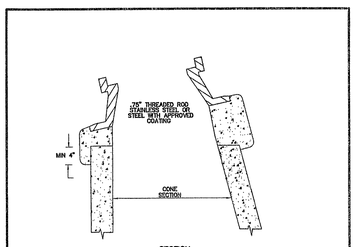

SECTION

NOTES
1 USE MODERATELY STIFF MIX OF NON-SHRINK CEMENT, SAND AND 1/2" AND LESS GRADED GRAVEL WITH 28 DAYS STRENGTH AT 5,000 P.S.I.
2 MIX IS TO BE FINISHED INTO AN APPROVED AND UNDER SIDE OF FRAME AND TO BE AT OR ABOVE TOP OF FLANGE
3 MAX OF 4 BRICK OR CONCRETE BLOCKS TO BE USED FOR GRADE CONTROL
4 DO NOT BACKFILL AROUND FRAME AND COVER FOR 48 HOURS MINIMUM AFTER INSTALLATION. USE LIFE OF HIGHEARLY CONCRETE CONCRETE COULD REDUCE TIME TO (24HRS).
5 RESTRICT TRAFFIC LOAD FOR MIN. 24 HOURS.

WESTERN VIRGINIA WATER AUTHORITY – CONSTRUCTION STANDARDS

REVISION	DATE	INSTALLATION DETAIL FOR ALL FRAMES AND COVERS	W-16
07/01/04			
03/01/06			

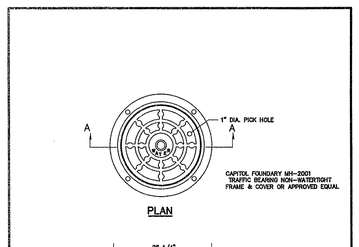

WESTERN VIRGINIA WATER AUTHORITY – CONSTRUCTION STANDARDS

REVISION	DATE	MANHOLE FRAME AND COVER	W-17
07/01/04			
03/01/06			

NOTES:
1. PUBLIC HYDRANTS SHALL BE PAINTED SILVER WITH AN OIL-BASED PAINT AND PRIVATE HYDRANTS SHALL BE PAINTED WHITE WITH AN OIL-BASED PAINT.
2. FIRE HYDRANT SHALL BE INSTALLED 2' MIN. AND 4' MAX. FROM BACK OF CURB OR 6' MIN. AND 12' MAX. WHEN CURB IS NOT PRESENT. FIRE HYDRANT TO BE INSTALLED WITHIN RIGHT-OF-WAY OR EASEMENT LINE.
3. AREA AROUND HYDRANT AT A RADIUS OF 4' TO BE LEVEL AND UNOBSTRUCTED.
4. WATERPROOF BAGS SHALL BE PLACED OVER ALL NEWLY INSTALLED FIRE HYDRANTS.
5. HIGH PRESSURE (OVER 120 PSI) REQUIRES THE USE ALL 3 RESTRAINTS.

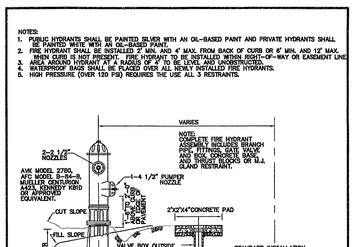

WESTERN VIRGINIA WATER AUTHORITY – CONSTRUCTION STANDARDS

REVISION	DATE	FIRE HYDRANT ASSEMBLY	W-18
07/01/04			
03/01/06			

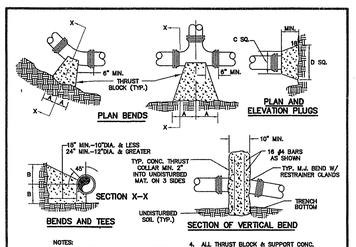

NOTES:
1. FOR VERT. BEND DOWN IN EXCESS OF 11 1/4" BEND, ANCHORAGE SHALL BE DESIGNED BY ENGINEER.
2. FOR VERT. BEND UPWARD, BLOCKING TO BE SIMILAR TO THAT FOR HORIZ. BEND.
3. GLANDS & BOLTS SHALL BE PROTECTED FROM CONC. BY PLASTIC SHEETING WHEN POURING THRUST BLOCKS.
4. ALL THRUST BLOCK & SUPPORT CONC. SHALL BE 3000 PSI READY MIX CONC.
5. THRUST BLOCKS WITH "B" DIMENSION GREATER THAN 30" SHALL HAVE THE RESTRAINED PIPE INSTALLED WITH A MINIMUM OF 4' OF COVER.
6. IF UNDER 100 PSI WORKING PRESSURE, RESTRAINT JOINTS MUST BE USED. IF EQUAL OR GREATER THAN 100 PSI WORKING PRESSURE, BOTH BLOCK AND RESTRAINT JOINTS ARE REQUIRED.

PRESSURE = 200 psf
BEARING = 2000 psf
FACTOR OF SAFETY = 1.5

PIPE SIZE	90° BEND A	90° BEND B	45° BEND A	45° BEND B	22 1/2° BEND A	22 1/2° BEND B	11 1/4° BEND A	11 1/4° BEND B	TEE A	TEE B	PLUG D
4"	8"	12"	8"	8"	6"	8"	6"	8"	11"	10"	8"
6"	10"	12"	8"	10"	8"	8"	8"	8"	11"	10"	12"	18"
8"	10"	13"	10"	10"	8"	8"	8"	8"	11"	12"	12"	24"
10"	20"	18"	12"	14"	8"	12"	8"	12"	14"	18"	18"	30"
12"	20"	18"	12"	14"	8"	12"	8"	12"	14"	18"	18"	30"
16"	28"	20"	14"	18"	11"	13"	11"	13"	18"	20"	20"	36"
20"	32"	42"	20"	20"	43"	22"	22"	16"	22"	42"	22"	42"
30"	160"	42"	100"	42"	53"	42"	40"	30"	180"	42"	180"	42"

WESTERN VIRGINIA WATER AUTHORITY – CONSTRUCTION STANDARDS

REVISION	DATE	THRUST BLOCK CONSTRUCTION	W-19
07/01/04			
03/01/06			

FACTOR OF SAFETY = 1.5

PIPE SIZE	PIPE MAT'L	90° BEND	45° BEND	22 1/2° BEND	11 1/4° BEND	VALVE	TEE BRANCH	REDUCER (NOTE 2)	VERT. 45°	VERT. 22 1/2°	VERT. 11 1/4°
6"	D.I.	28'	12'	6'	3'	38'	34'	22'	23"	11"	5'
8"	D.I.	37'	15'	7'	4'	51'	47'	31'	30'	15'	7'
10"	D.I.	45'	19'	9'	4'	61'	57'	20'	37"	18'	9'
12"	D.I.	53'	22'	11'	5'	73'	69'	38'	43'	21'	10'
6"	PVC	30'	12'	6'	3'	56'	30'	29'	35'	17'	8'
8"	PVC	40'	16'	8'	4'	74'	56'	31'	46'	22'	11'
10"	PVC	47'	20'	9'	5'	89'	52'	30'	56'	27'	13'
12"	PVC	56'	22'	11'	6'	106'	62'	56'	66'	32'	16'

1. ALL JOINTS SHALL BE RESTRAINED ON BOTH SIDES OF THE FITTING FOR THE LENGTH SHOWN UNLESS OTHERWISE INDICATED.
2. REDUCER IS ONE SIZE SMALLER THAN PIPE LISTED. RESTRAINED LENGTH IS UPSTREAM ON THE LARGE SIDE OF THE REDUCER.
3. IF UNDER 100 PSI WORKING PRESSURE, RESTRAINT JOINT(S) ARE TO BE USED. IF EQUAL TO OR OVER 100 PSI WORKING PRESSURE, BOTH THRUST BLOCK AND RESTRAINT JOINTS SHALL BE USED.

WESTERN VIRGINIA WATER AUTHORITY – CONSTRUCTION STANDARDS

REVISION	DATE	THRUST RESTRAINT OF PIPE JOINTS DESIGN LENGTHS	W-20
07/01/04			
03/01/06			

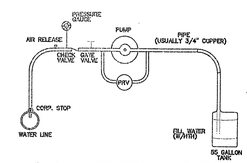

TYPICAL WATER PRESSURE TEST RIG

WESTERN VIRGINIA WATER AUTHORITY – CONSTRUCTION STANDARDS

REVISION	DATE	TYPICAL WATER PRESSURE TEST RIG	W-21
07/01/04			
03/01/06			

GAY AND NEEL, INC.
CIVIL ENGINEERING
LAND PLANNING
SURVEYING
328 Mountain Avenue S.W.
Roanoke, Virginia 24016
Phone: (540) 342-1180 Fax: (540) 345-5560
Email: info@gayandneel.com

Western Virginia Water Authority Details

Ingal Boulevard Waterline Replacement

Roanoke County, Virginia

COMMONWEALTH OF VIRGINIA
JOHN T. NEEL
Lic. No. 035780
01/27/10
PROFESSIONAL ENGINEER

REVISED:
11/30/09

DESIGNED/CALC.: TMK
CHECKED:
DRAWN: RWA
SCALE: 1"=30'
DATE: 01/08/09

JOB NO. 2119.0

SHEET C2-01

119.0\Plans\2119.0-PH2-SHEET_C2.dwg, 1/18/2010 2:37:13 PM, DWF6 ePlot.pc3,