1. WHEN APPROVED BY PARTICIPATING UTILITY, FIRE HYDRANT ASSEMBLIES MAY BE USED AS PERMANENT END OF LINES.
2. DETAIL FOR UP TO 8" MAINS, LARGER LINES SEE WATER SYSTEM DESIGN STANDARDS FOR MIN. FLUSHING VALVE REQUIREMENTS.
3. THE END OF A PIPELINE SHALL NOT TERMINATE IN A PAVED AREA OR UNDER A CONCRETE CURB & GUTTER.
4. THE PIPING AND "STREET ELS" BETWEEN THE MAIN LINE AND 2" GATE VALVE SHALL BE LEAD FREE BRASS OR DUCTILE IRON.
5. RESTRAINED JOINTS SHALL BE INSTALLED BEFORE MJ PLUG FOR DISTANCE SHOWN IN THE "MINIMUM THRUST RESTRAINT OF PIPE JOINTS DESIGN LENGTHS" DETAIL FOR VALVE/PLUG AND CORRESPONDING PLUG DIAMETER.
6. FRAME SHALL BE SECURED TO VAULT BY EITHER BOLTS OR BUTYL MASTIC.

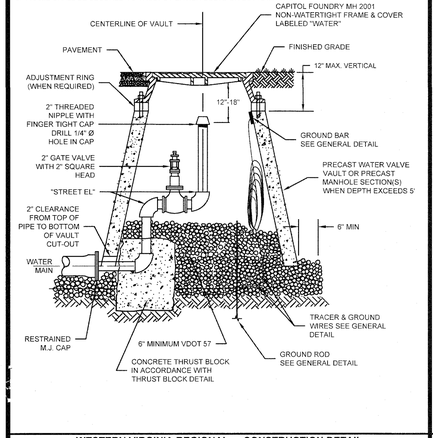

WESTERN VIRGINIA REGIONAL - CONSTRUCTION DETAIL

PERMANENT END OF LINE BLOW-OFF ASSEMBLY — 02/10/15 — **W-10**

1. THE 2" PIPING AND "STREET EL" SHALL BE LEAD FREE BRASS OR DUCTILE IRON.
2. PIPE JOINTS SHALL BE RESTRAINED BEFORE GATE VALVE IN ACCORDANCE WITH DISTANCE SHOWN IN THE "MINIMUM THRUST RESTRAINT OF PIPE JOINTS DESIGN LENGTHS" DETAIL FOR VALVE / PLUG. PIPE JOINTS BETWEEN GATE VALVE AND BLOWOFF SHALL ALSO BE RESTRAINED.
3. FRAME SHALL BE SECURED TO VAULT BY EITHER BOLTS OR BUTYL MASTIC.

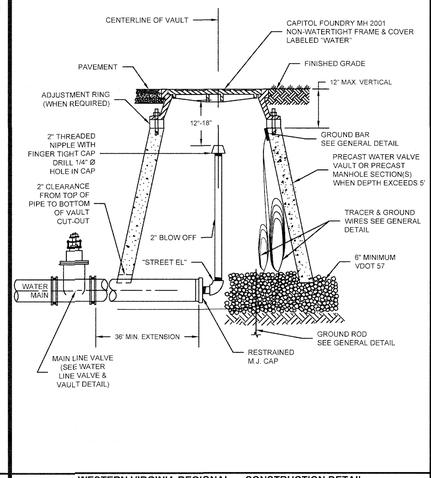

WESTERN VIRGINIA REGIONAL - CONSTRUCTION DETAIL

TEMPORARY END OF LINE BLOW-OFF ASSEMBLY — 01/01/14 — **W-11**

1. FIRE HYDRANTS MAY BE USED AT LOW POINTS IN PLACE OF BLOW-OFFS.
2. THE PIPING AND "STREET ELS" BETWEEN CORPORATION STOP AND 2" GATE VALVE SHALL BE LEAD FREE BRASS OR DUCTILE IRON PIPE.
3. THE POINT OF CONNECTION TO THE WATER MAIN SHALL BE LOCATED NEAR THE BOTTOM OF THE MAIN (AS SHOWN) TO FACILITATE REMOVAL OF ACCUMULATED SEDIMENT.
4. SADDLES FOR PLASTIC PIPE SHALL BE PER RESIDENTIAL WATER SERVICE DETAIL.
5. FRAME SHALL BE SECURED TO VAULT BY EITHER BOLTS OR BUTYL MASTIC.

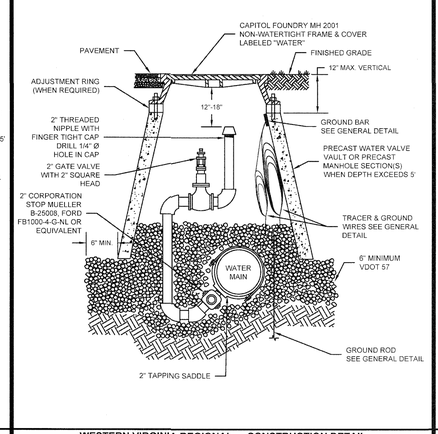

WESTERN VIRGINIA REGIONAL - CONSTRUCTION DETAIL

IN-LINE BLOW-OFF ASSEMBLY — 02/10/15 — **W-12**

1. SEE RESIDENTIAL WATER SERVICE DETAIL FOR SADDLE REQUIREMENTS.
2. LARGER COMBINATION VALVE MAY BE REQUIRED DEPENDING ON APPLICATION.
3. FRAME SHALL BE SECURED TO VAULT BY EITHER BOLTS OR BUTYL MASTIC.

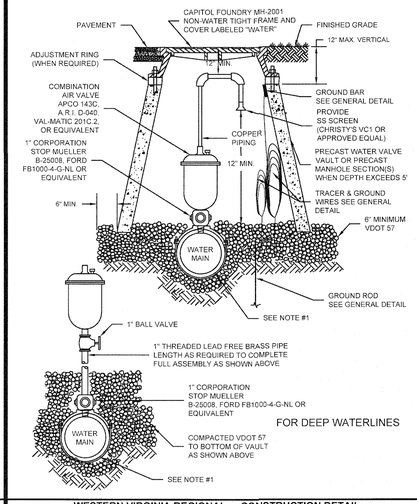

FOR DEEP WATERLINES

WESTERN VIRGINIA REGIONAL - CONSTRUCTION DETAIL

COMBINATION AIR VALVE ASSEMBLY — 02/10/15 — **W-13**

1. 2" CORPORATION STOP: MUELLER B-25008, FORD FB1000-4-G-NL OR EQUIVALENT.
2. LIQUID FILLED PRESSURE GAUGE.
3. 2" FLANGED PRESSURE REGULATING VALVE (CLA-VAL MODEL 90-01 OR APPROVED EQUAL) SET AT WORKING PRESSURE.
4. FLANGE x FLANGE MAIN LINE PRESSURE REGULATING VALVE (CLA-VAL MODEL 90-01 OR APPROVED EQUAL) SET AT 5 psi LESS THAN #3. (CLA-VAL 690-01 OR APPROVED EQUAL) MAY BE ALLOWED IN SOME INSTALLATIONS. CONFIRM WITH PARTICIPATING UTILITY.
5. FLANGE x FLANGE GATE VALVE, WITH HAND WHEEL. ONE SIZE LESS THAN MAIN LINE.
6. FLANGE x FLANGE PRESSURE RELIEF VALVE, ONE SIZE LESS THAN MAIN LINE (CLA-VAL MODEL 650-01 OR APPROVED EQUAL) SET AT 5 psi GREATER THAN #3.
7. VAULT SHALL BE PRE-CAST 5,000 PSI REINFORCED CONCRETE.
8. MAIN LINE (INLET, OUTLET, AND INTERIOR) PIPING SHALL BE FLANGED - PLAIN END, OR PLAIN END DUCTILE IRON PIPE WITH APPROVED FLANGE ADAPTER. MIN. PRESSURE CLASS 350 OR THICKNESS CLASS 50.
9. VAULT TO BE INSTALLED ON MIN. 6" COMPACTED VDOT #57 STONE.

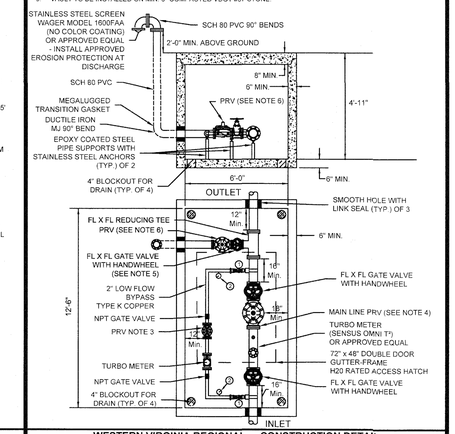

WESTERN VIRGINIA REGIONAL - CONSTRUCTION DETAIL

MAIN LINE - PRESSURE REDUCING VALVE ASSEMBLY — 1/26/16 — **W-14**

1. TO BE USED WHEN STANDARD VAULT CONSTRUCTION EXCEEDS MAXIMUM VERTICAL HEIGHT OF 5'.

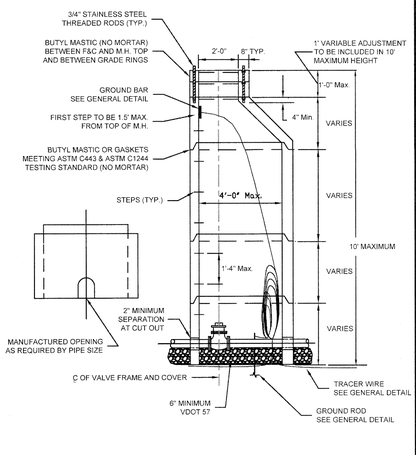

WESTERN VIRGINIA REGIONAL - CONSTRUCTION DETAIL

DEEP VALVE VAULT (MANHOLE) — 01/01/14 — **W-15**

1. USE MODERATELY STIFF MIX OF NON SHRINK GROUT, SAND, AND 1/2" AND LESS DIAMETER GRAVEL WITH 28 DAYS STRENGTH AT MINIMUM 3,000 P.S.I.
2. MIX IS TO BE FORCED INTO ALL GROOVES AND UNDER FLANGE OF FRAME AND LEFT AT OR ABOVE TOP OF FLANGE.
3. DO NOT BACKFILL AROUND FRAME AND COVER, FOR 48 HOURS AFTER CONCRETE IS PLACED. THE USE OF HIGH EARLY STRENGTH CEMENT WOULD REDUCE TIME TO (24 HRS.)
4. RESTRICT TRAFFIC LOAD FOR A MINIMUM OF 24 HOURS.
5. FRAME SHALL BE SECURED TO VAULT BY EITHER BOLTS OR BUTYL MASTIC.

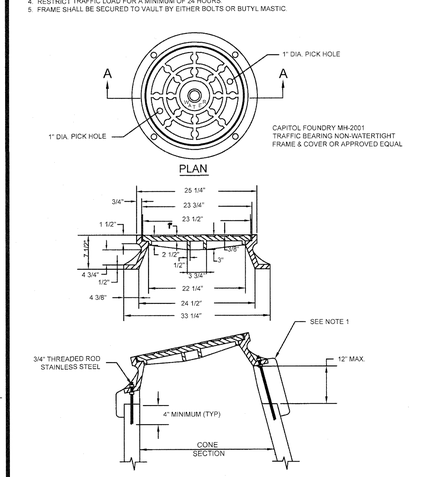

WESTERN VIRGINIA REGIONAL - CONSTRUCTION DETAIL

VAULT FRAME AND COVER — 01/01/14 — **W-16**

1. PUBLIC HYDRANTS SHALL BE PAINTED SILVER WITH AN OIL-BASED PAINT. PRIVATE HYDRANTS SHALL ALSO BE PAINTED SILVER WITH AN OIL-BASED PAINT UNLESS OTHERWISE SPECIFIED BY THE JURISDICTIONAL FIRE MARSHALL PRIOR TO OR IMMEDIATELY FOLLOWING INSTALLATION.
2. FIRE HYDRANT SHALL BE INSTALLED 2' MIN. AND 4' MAX. FROM BACK OF CURB OR 6' MIN. AND 12' MAX. FROM EDGE OF PAVEMENT WHEN CURB IS NOT PRESENT. FIRE HYDRANT TO BE INSTALLED WITHIN RIGHT-OF-WAY OR EASEMENT LINE.
3. AREA AROUND HYDRANT AT A RADIUS OF 4' TO BE LEVEL AND UNOBSTRUCTED.
4. WATERPROOF BAGS OR OUT OF SERVICE RINGS SHALL BE PLACED OVER ALL NEWLY INSTALLED FIRE HYDRANTS.
5. HYDRANT ASSEMBLIES SHALL BE RODDED AND RESTRAINED WITH APPROVED M.J. GLAND RESTRAINTS. HIGH PRESSURE (OVER 150 PSI) ALSO REQUIRES CONCRETE THRUST BLOCKS AS SHOWN BELOW.
6. IF DURING CONSTRUCTION THE SEASONAL WATER LEVEL IS NOTED TO BE ABOVE THE DRAIN OUTLETS OF THE PROPOSED HYDRANT, THE PARTICIPATING UTILITY WILL BE NOTIFIED IMMEDIATELY SO THAT THE HYDRANT CAN BE RELOCATED TO A SUITABLE LOCATION, OMITTED, OR THE DRAIN HOLE PLUGGED.
7. TWO WRAPS OF TRACER WIRE SHALL BE WRAPPED AROUND BASE OF HYDRANT.
8. APPROVED MODELS - AVK MODEL 2780, AFC MODEL B-84-B-5, MUELLER CENTURION A423, KENNEDY K81D, M&H 1299 OR EQUIVALENT.
9. WHERE HYDRANT LATERAL(S) IS APPROVED BY THE PARTICIPATING UTILITY TO BE LONGER IN LENGTH, MAKING THE CONTINUOUS SECTION OF PIPE ON EACH SIDE OF THE GATE VALVE UNFEASIBLE, RESTRAINED PIPE JOINTS SHALL BE INSTALLED BETWEEN THE TEE AND GATE VALVE IN LIEU OF RODDING. HOWEVER, A RODDED CONTINUOUS SECTION OF PIPE SHALL ALWAYS BE INSTALLED BETWEEN THE GATE VALVE AND HYDRANT.
10. WHERE VALVE BOXES ARE UTILIZED, A TOP HAT ADAPTOR MUST ALSO BE USED.

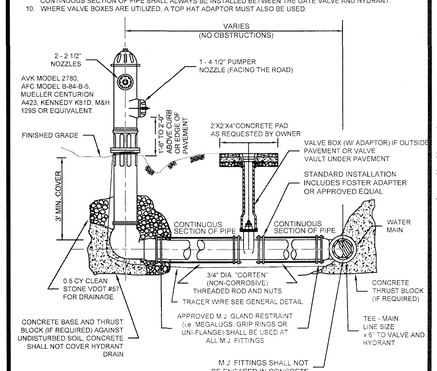

WESTERN VIRGINIA REGIONAL - CONSTRUCTION DETAIL

FIRE HYDRANT ASSEMBLY — 02/10/15 — **W-17**

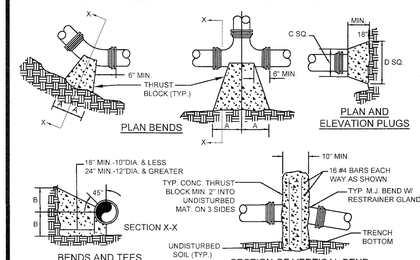

NOTES

1. FOR VERT. BEND DOWN IN EXCESS OF 11 1/4° BEND, ANCHORAGE SHALL BE DESIGNED BY ENGINEER.
2. FOR VERT. BEND UPWARD, BLOCKING TO BE SIMILAR TO THAT FOR HORZ. BEND.
3. GLANDS & BOLTS SHALL BE PROTECTED FROM CONC. WITH PLASTIC SHEETING WHEN POURING THRUST BLOCKS.
4. ALL THRUST BLOCK & SUPPORT CONCRETE SHALL BE 3000 PSI READY MIX CONCRETE.
5. THRUST BLOCKS WITH "B" DIMENSION GREATER THAN 30" SHALL HAVE THE RESTRAINED PIPE INSTALLED WITH A MINIMUM OF 4' OF COVER.
6. REFER TO "MINIMUM THRUST RESTRAINT OF PIPE JOINTS DESIGN LENGTHS" DETAIL FOR WHEN THRUST BLOCKS ARE REQUIRED TO BE USED.
7. WHEN THRUST BLOCK IS REQUIRED BUT NOT FEASIBLE TO CONSTRUCT, THRUST COLLAR SHALL BE USED. SEE "THRUST COLLAR" DETAIL.

PRESSURE = 200psi
BEARING = 2000psf
FACTOR OF SAFETY = 1.5

PIPE SIZE	90° BEND		45° BEND		22 1/2° BEND		11 1/4° BEND		TEE		PLUG	
	A	B	A	B	A	B	A	B	A	B	C	D
4"	8"	12"	8"	8"	6"	6"	6"	6"	11"	9"	10"	6"
6"	18"	12"	9"	10"	8"	8"	8"	8"	11"	10"	12"	18"
8"	18"	13"	10"	10"	8"	8"	8"	8"	11"	12"	12"	24"
10"	20"	16"	12"	14"	8"	12"	8"	12"	14"	15"	15"	30"
12"	20"	16"	12"	14"	8"	12"	8"	12"	14"	15"	15"	30"
15"	26"	20"	16"	19"	11"	13"	11"	13"	18"	20"	20"	36"
24"	92"	42"	62"	30"	44"	22"	22"	16"	82"	42"	82"	42"
30"	185"	42"	100"	42"	52"	42"	40"	30"	185"	42"	185"	42"

WESTERN VIRGINIA REGIONAL - CONSTRUCTION DETAIL

THRUST BLOCK REQUIREMENTS — 02/10/15 — **W-18**

PIPE SIZE	PIPE MAT'L	90° BEND	45° BEND	22 1/2° BEND	11 1/4° BEND	VALVE / PLUG (NOTE 2)	TEE BRANCH (NOTE 3)	REDUCER (NOTE 4)	45° VERT.	22 1/2° VERT.	11 1/4° VERT.
4"	D.I.	26'	19'	6'	3'	50'	26'	17'	21'	10'	5'
6"	D.I.	28'	21'	6'	3'	50'	26'	26'	21'	10'	5'
8"	D.I.	36'	21'	8'	4'	65'	41'	27'	27'	13'	7'
10"	D.I.	43'	21'	9'	5'	77'	53'	26'	32'	16'	8'
12"	D.I.	51'	21'	10'	5'	91'	67'	27'	38'	18'	9'
16"	D.I.	87'	36'	18'	9'	176'	99'	75'	38'	18'	9'
24"	D.I.	123'	51'	25'	13'	255'	134'	77'	51'	25'	13'
4"	PVC	27'	11'	3'	2'	60'	25'	30'	25'	10'	5'
6"	PVC	29'	21'	6'	3'	78'	25'	40'	32'	16'	8'
8"	PVC	37'	21'	8'	4'	102'	49'	43'	42'	21'	10'
10"	PVC	44'	21'	9'	5'	122'	68'	41'	51'	25'	12'
12"	PVC	51'	21'	11'	6'	143'	89'	42'	60'	29'	15'
16"	PVC	87'	36'	18'	9'	176'	100'	75'	60'	29'	15'
24"	PVC	123'	51'	25'	13'	255'	134'	90'	84'	40'	20'

FACTOR OF SAFETY = 1.5

1. ALL JOINTS SHALL BE RESTRAINED ON BOTH SIDES OF THE FITTING AND DOCUMENTED BY THE INSPECTOR FOR THE LENGTH SHOWN UNLESS OTHERWISE INDICATED.
2. RESTRAINED LENGTH SHOWN REFERS TO ANY DESIGNED OR POTENTIAL LINE STOP, INCLUDING ALL GATE VALVES.
3. RESTRAINED LENGTH SHOWN REFERS TO THE BRANCH LINE ONLY. THE CONTINUOUS PIPE LENGTH OF THE MAIN RUN SHALL BE A MINIMUM OF 10' ON EACH SIDE OF THE TEE.
4. RESTRAINED LENGTH SHOWN IS BASED ON REDUCING PIPE DIAMETER TO ONE SIZE SMALLER THAN PIPE LISTED (ANY OTHER DIAMETER REDUCTION WILL REQUIRE ADDITIONAL CALCULATIONS BEFORE INSTALLATION). RESTRAINED LENGTH SHOWN IS UPSTREAM ON THE LARGE SIDE OF THE REDUCER.
5. 12" AND SMALLER DIAMETER: IF UNDER 150 PSI WORKING PRESSURE, RESTRAINED JOINT(S) ARE TO BE USED. IF EQUAL TO OR OVER 150 PSI WORKING PRESSURE, BOTH THRUST BLOCK(S) AND RESTRAINED JOINT(S) SHALL BE USED (UNLESS OTHERWISE APPROVED BY THE PARTICIPATING UTILITY).

   LARGER THAN 12" DIAMETER: IF UNDER 100 PSI WORKING PRESSURE, RESTRAINED JOINT(S) ARE TO BE USED. IF EQUAL TO OR OVER 100 PSI WORKING PRESSURE, BOTH THRUST BLOCK(S) AND RESTRAINED JOINT(S) SHALL BE USED (UNLESS OTHERWISE APPROVED BY THE PARTICIPATING UTILITY).
6. FOR RESTRAINED JOINT PIPING REQUIREMENTS AT FITTING R.J. PVC AND R.J. DIP MAY BE USED INTERCHANGEABLY WITH APPROVAL FROM PARTICIPATING UTILITY. CONTRACTOR MUST PLAN ACCORDINGLY FOR THE DIFFERENCE IN PVC AND DIP BELL AND SPIGOT DIMENSIONS.

WESTERN VIRGINIA REGIONAL - CONSTRUCTION DETAIL

MINIMUM THRUST RESTRAINT OF PIPE JOINTS DESIGN LENGTHS — 02/10/15 — **W-19**

WESTERN VIRGINIA WATER AUTHORITY
ENGINEERING SERVICES
601 S JEFFERSON ST, SUITE 300
ROANOKE, VA 24011
540-853-5700

COMMONWEALTH OF VIRGINIA
W. C. Bulloss
WILLIAM C. BULLOSS
Lic. No. 053694
04/04/2019
PROFESSIONAL ENGINEER

MAPLELAWN & FRONTIER WATERLINE REPLACEMENT

DETAILS

Rev	Description	Date	By

Designed:
Drawn: DRJ
Checked:
Approved: WCB
Date: APRIL 2019
Project: WCIP-324