2016 ROAD & BRIDGE STANDARDS

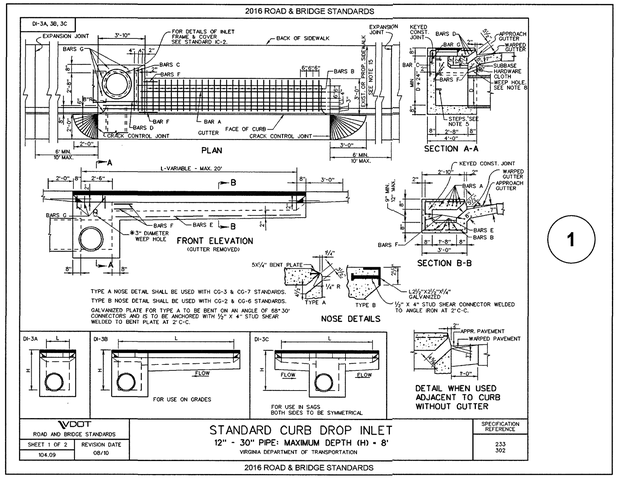

VDOT — ROAD AND BRIDGE STANDARDS

STANDARD CURB DROP INLET

12" - 30" PIPE: MAXIMUM DEPTH (H) - 8'

VIRGINIA DEPARTMENT OF TRANSPORTATION

SHEET 1 OF 2	REVISION DATE	SPECIFICATION REFERENCE
104.09	08/10	233, 302

1

2016 ROAD & BRIDGE STANDARDS

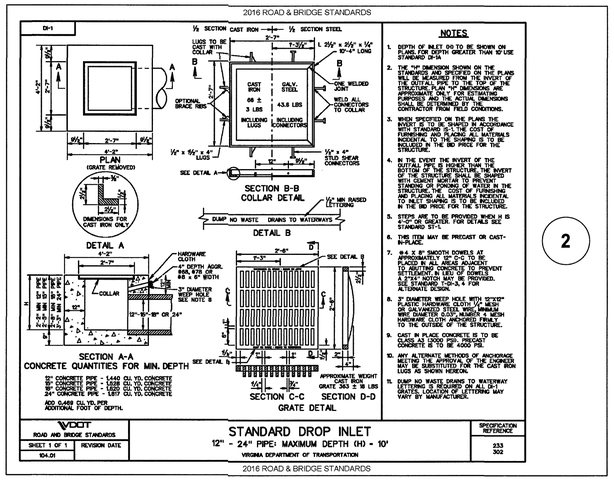

NOTES

1. DEPTH OF INLET DG TO BE SHOWN ON PLANS FOR DEPTH GREATER THAN 10' USE STANDARD DI-1A
2. THE FLOW-LINE ELEVATION SHOWN ON THE STANDARD AND SPECIFIED ON THE PLANS WILL BE MEASURED FROM THE INVERT OF THE OUTFALL PIPE TO THE TOP OF THE GRATE. THE FLOW-LINE ELEVATION IS APPROXIMATE ONLY FOR ESTIMATING PURPOSES AND THE ACTUAL DIMENSIONS SHALL BE DETERMINED BY THE CONTRACTOR FROM FIELD CONDITIONS.
3. WHEN SPECIFIED ON THE PLANS THE INVERT OF THE GRATE SHALL BE SHAPED IN ACCORDANCE WITH SECTION 302 OF THE ROAD AND BRIDGE SPECIFICATIONS AND ALL MATERIALS INCIDENTAL TO THE SHAPING IS TO BE INCLUDED IN THE BID PRICE FOR THE STRUCTURE.
4. IN THE EVENT THE INVERT OF THE OUTFALL PIPE IS BELOW THE BOTTOM OF THE STRUCTURE, THE INVERT OF THE STRUCTURE SHALL BE SHAPED WITH CEMENT MORTAR TO PREVENT SEDIMENTATION. ALL COSTS OF THE STRUCTURE, THE COST OF FURNISHING AND PLACING ALL MATERIALS INCIDENTAL TO SHAPING THE INVERT SHALL BE INCLUDED IN THE BID PRICE FOR THE STRUCTURE.
5. STEPS ARE TO BE PROVIDED WHEN H IS 4' OR GREATER. FOR DETAILS SEE STANDARD ST-1.
6. THIS ITEM MAY BE PRECAST OR CAST-IN-PLACE.
7. #4 X 8' SMOOTH DOWELS AT APPROXIMATELY 60" C-C SHALL BE PROVIDED BETWEEN CONCRETE PIPE TO RESTRAIN CONCRETE TO PREVENT SETTLEMENT. AT LIEU OF DOWELS, A 2" SQ. NOTCH MAY BE PROVIDED. SEE STANDARD PB-1, & FOR ALTERNATE DESIGN.
8. 3" DIAMETER WEEP HOLE WITH 12"X12" PLASTIC OR GALVANIZED STEEL WITH MINIMUM WIRE DIAMETER OF NUMBER 4 MESH HARDWARE CLOTH ANCHORED FIRMLY TO THE OUTSIDE OF THE STRUCTURE.
9. CAST IN PLACE CONCRETE IS TO BE CLASS A3 IF CAST IN PLACE. CONCRETE IS TO BE 4000 PSI.
10. ANY ALTERNATE METHODS OF ANCHORAGE MEETING THE APPROVAL OF THE ENGINEER MAY BE SUBSTITUTED FOR THE CAST IRON LUGS AS SHOWN HEREON.
11. DUMP NO WASTE DRAINS TO WATERWAY

VDOT — ROAD AND BRIDGE STANDARDS

STANDARD DROP INLET

12" - 24" PIPE: MAXIMUM DEPTH (H) - 10'

VIRGINIA DEPARTMENT OF TRANSPORTATION

SHEET 1 OF 1	REVISION DATE	SPECIFICATION REFERENCE
104.01		233, 302

2

2016 ROAD & BRIDGE STANDARDS

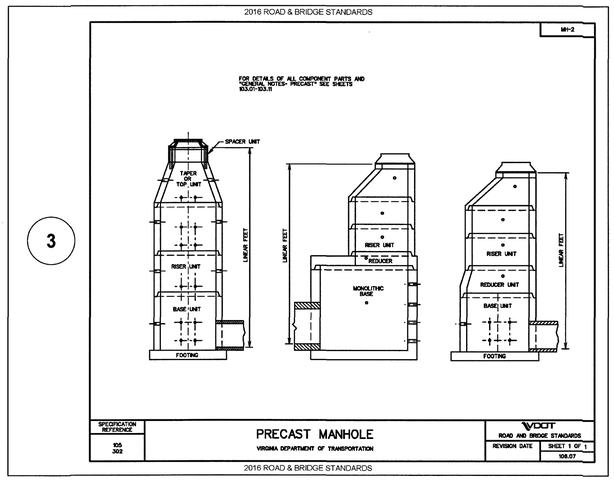

VDOT — ROAD AND BRIDGE STANDARDS

PRECAST MANHOLE

VIRGINIA DEPARTMENT OF TRANSPORTATION

SPECIFICATION REFERENCE	REVISION DATE	SHEET 1 OF 1
105, 302		108.07

3

2016 ROAD & BRIDGE STANDARDS

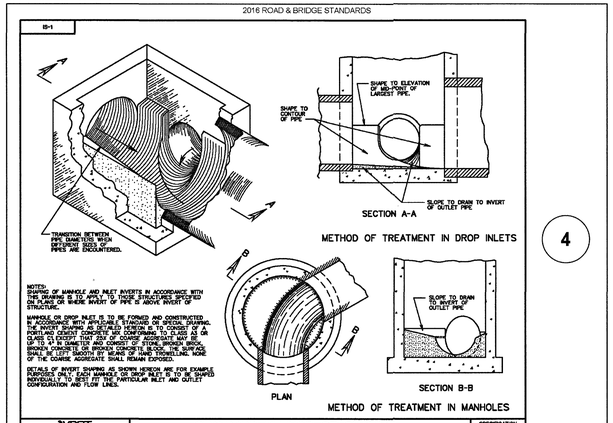

NOTES:

SHAPING OF MANHOLE AND INLET INVERTS IN ACCORDANCE WITH THIS DRAWING IS REQUIRED WHEN PIPE SHAPES ARE SPECIFIED ON PLANS OR WHERE INVERT OF PIPE IS ABOVE INVERT OF STRUCTURE.

MANHOLE OR DROP INLET IS TO BE FORMED AND CONSTRUCTED IN ACCORDANCE WITH APPLICABLE STANDARD OR SPECIAL DRAWING. THE INVERT SHAPING AS DETAILED HEREON IS TO CONSIST OF A PORTLAND CEMENT CONCRETE (PCC) MIXTURE OF 1 PART PCC OR PCC/FLAC CEMENT THAT USE OF COARSE AGGREGATE AND SAND UP TO 1/2 IN DIAMETER AND CONSIST OF STONE, BROKEN BRICK, BROKEN CONCRETE OR BROKEN CONCRETE BLOCK. THE SURFACE SHALL BE LEFT SMOOTH BY WOOD AND TROWELLING. NONE OF THE COARSE AGGREGATE SHALL REMAIN EXPOSED.

DETAILS OF INVERT SHAPING AS SHOWN HEREON ARE FOR EXAMPLE ONLY. THE ACTUAL SHAPE OF THE INVERT WILL VARY TO FIT THE INDIVIDUAL PIPE BEST FITTED TO PARTICULAR INLET AND OUTLET CONFIGURATION AND FLOW LINES.

VDOT — ROAD AND BRIDGE STANDARDS

STANDARD METHOD OF SHAPING MANHOLE & INLET INVERTS

VIRGINIA DEPARTMENT OF TRANSPORTATION

SHEET 1 OF 1	REVISION DATE	SPECIFICATION REFERENCE
106.08		302

4

2016 ROAD & BRIDGE STANDARDS

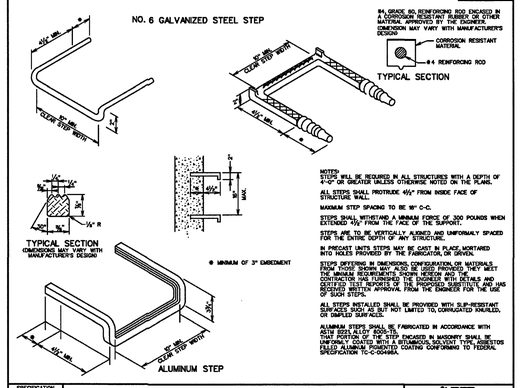

NOTES:

STEPS WILL BE REQUIRED IN ALL STRUCTURES WITH A DEPTH OF 4'-0" OR GREATER UNLESS OTHERWISE NOTED ON THE PLANS.

ALL STEPS SHALL PROTRUDE 4½" FROM INSIDE FACE OF STRUCTURE WALL.

MAXIMUM STEP SPACING TO BE 18" C-C.

STEPS SHALL WITHSTAND A MINIMUM FORCE OF 300 POUNDS WHEN EXTENDED 1½" FROM THE FACE OF THE SUPPORT.

STEPS TO BE VERTICALLY ALIGNED AND UNIFORMLY SPACED FOR THE ENTIRE DEPTH OF ANY STRUCTURE.

IN PRECAST STRUCTURES, STEPS SHALL BE PLACE MORTARED INTO HOLES PROVIDED BY THE FABRICATOR OR CENTER.

STEPS DEFERRED IN DIMENSIONS CONSIDERATION OF MATERIAL, THE ALUMINUM STEP MAY BE SUBSTITUTED FOR THE STEEL WHEN THE APPROVED REQUIREMENTS SHOWN HEREON AND THE CONTRACTOR HAS FURNISHED THE ENGINEER WITH DETAILS AND CERTIFIED TEST REPORTS ON THE PROPOSED SUBSTITUTE AND HAS RECEIVED WRITTEN APPROVAL FROM THE ENGINEER FOR THE USE OF SUCH STEPS.

ALL STEPS INSTALLED SHALL BE PROVIDED WITH SLIP-RESISTANT SURFACE TREATMENT. SLIP POT LIMITED TO CORRUGATED KNURLED, OR DIMPLED SURFACE.

ALUMINUM STEPS SHALL BE FABRICATED IN ACCORDANCE WITH ASTM B221, ALLOY 6061-T6.

THAT PORTION OF THE STEP ENCASED IN MASONRY SHALL BE UNIFORMLY COATED WITH A BITUMINOUS, SOLVENT TYPE, ASBESTOS FILLED ALUMINUM PIGMENTED COATING CONFORMING TO FEDERAL SPECIFICATION TT-C-506BBA.

VDOT — ROAD AND BRIDGE STANDARDS

STANDARD STEP

VIRGINIA DEPARTMENT OF TRANSPORTATION

SPECIFICATION REFERENCE	REVISION DATE	SHEET 1 OF 1
		108.09

5

2016 ROAD & BRIDGE STANDARDS

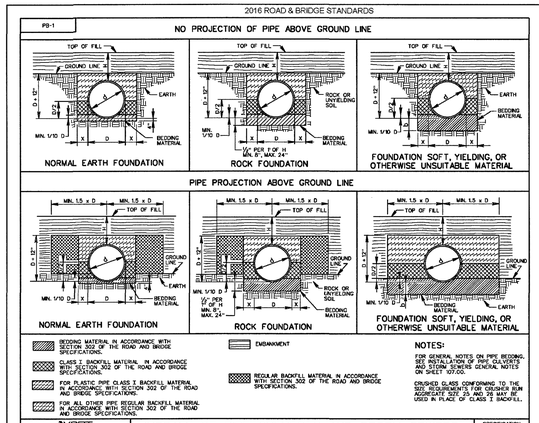

BEDDING MATERIAL IN ACCORDANCE WITH SECTION 302 OF THE ROAD AND BRIDGE SPECIFICATIONS.

CLASS I BACKFILL MATERIAL IN ACCORDANCE WITH SECTION 302 OF THE ROAD AND BRIDGE SPECIFICATIONS.

FOR PLASTIC PIPE CLASS I BACKFILL MATERIAL IN ACCORDANCE WITH SECTION 302 OF THE ROAD AND BRIDGE SPECIFICATIONS.

FOR ALL OTHER PIPE REGULAR BACKFILL MATERIAL IN ACCORDANCE WITH SECTION 302 OF THE ROAD AND BRIDGE SPECIFICATIONS.

EMBANKMENT

REGULAR BACKFILL MATERIAL IN ACCORDANCE WITH SECTION 302 OF THE ROAD AND BRIDGE SPECIFICATIONS.

NOTES:

FOR GENERAL NOTES ON PIPE BEDDING, SEE INSTALLATION OF PIPE CULVERTS AND STORM SEWERS GENERAL NOTES ON SHEET 107.00.

CRUSHED GLASS CONFORMING TO THE REQUIREMENTS OF VDOT MATERIALS FORM AGGREGATE SIZE 23 AND 26 MAY BE USED IN PLACE OF CLASS I BACKFILL.

VDOT — ROAD AND BRIDGE STANDARDS

INSTALL. OF PIPE CULVERTS AND STORM SEWERS CIRC. PIPE BEDDING AND BACKFILL - METHOD "A"

VIRGINIA DEPARTMENT OF TRANSPORTATION

SHEET 1 OF 4	REVISION DATE	SPECIFICATION REFERENCE
107.01	07/12	302, 303

6

2016 ROAD & BRIDGE STANDARDS

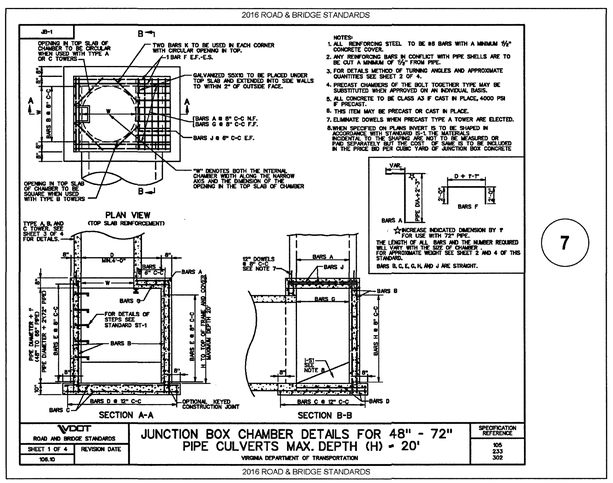

NOTES:

1. ALL REINFORCING STEEL TO BE #8 BARS WITH A MINIMUM 5½" CONCRETE COVER.
2. ANY REINFORCING BARS IN CONFLICT WITH PIPE SHELLS ARE TO BE CUT A MINIMUM OF 5½" FROM PIPE.
3. FOR DETAILS METHOD OF TURNING ANGLES AND APPROXIMATE QUANTITIES SEE SHEET 3 OF 4.
4. PRECAST CHAMBERS OF THE BOLT TOGETHER TYPE MAY BE SUBSTITUTES WHEN APPROVED ON AN INDIVIDUAL BASIS.
5. ALL CONCRETE TO BE CLASS A3 IF CAST IN PLACE, 4000 PSI IF PRECAST.
6. THIS ITEM MAY BE PRECAST OR CAST IN PLACE.
7. ELIMINATE DOWELS WHEN PRECAST TYPE A TOWER ARE ELECTED.
8. WHEN SPECIFIED ON PLANS INVERT IS TO BE SHAPED IN ACCORDANCE WITH STANDARD SC-1 TYPE MATERIAL, PORTLAND CEMENT CONCRETE (PCC) MIXTURE OF 1 PART PCC OR PCC/FLAC CEMENT THAT USE OF COARSE AGGREGATE UP TO 1/2 IN DIAMETER AND SAND. THE SHAPE IS TO BE INCLUDED IN THE PRICE BID PER CUBIC YARD OF JUNCTION BOX CONCRETE

VDOT — ROAD AND BRIDGE STANDARDS

JUNCTION BOX CHAMBER DETAILS FOR 48" - 72" PIPE CULVERTS MAX. DEPTH (H) - 20'

VIRGINIA DEPARTMENT OF TRANSPORTATION

SHEET 1 OF 4	REVISION DATE	SPECIFICATION REFERENCE
106.10		105, 233, 302

7

2016 ROAD & BRIDGE STANDARDS

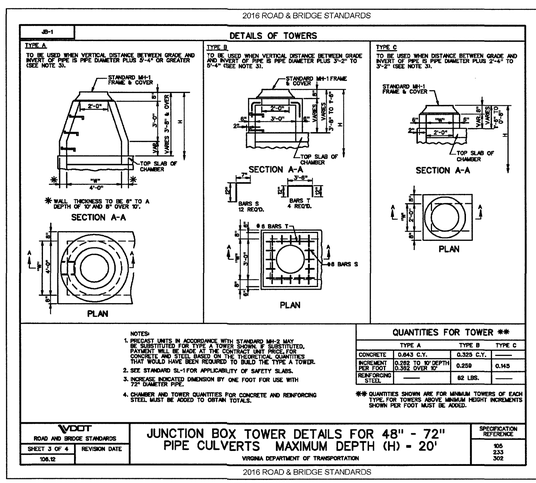

NOTES:

1. PRECAST UNITS IN ACCORDANCE WITH STANDARD MH-2 MAY BE SUBSTITUTED FOR TYPE A TOWER SHOWN. IF SUBSTITUTED, PAYMENT WILL BE MADE AT THE CONTRACT UNIT PRICE FOR TYPE A TOWER. THE PRECAST UNITS SHALL BE THE EXACT QUANTITIES THAT WOULD HAVE BEEN REQUIRED TO BUILD THE TYPE A TOWER.
2. SEE STANDARD SL-1 FOR APPLICABILITY OF SAFETY SLABS.
3. INCREASE INDICATED DIMENSION BY ONE FOOT FOR USE WITH 72" DIAMETER PIPE.
4. CHAMBER AND TOWER QUANTITIES FOR CONCRETE AND REINFORCING STEEL MUST BE ADDED TO OBTAIN TOTALS.

QUANTITIES FOR TOWER **

	TYPE A	TYPE B	TYPE C
CONCRETE	0.843 C.Y.	0.329 C.Y.	——
INCREMENT 0.282 TO 10' DEPTH	0.282 C.Y.	0.259	0.145
INCREMENT 0.282 OVER 10'	0.282 C.Y.		
REINFORCING STEEL	——	62 LBS.	——

** QUANTITIES SHOWN ARE FOR MINIMUM TOWERS OF EACH TYPE. FOR TOWERS ABOVE MINIMUM HEIGHT INCREMENTS SHOWN PER FOOT MUST BE ADDED.

VDOT — ROAD AND BRIDGE STANDARDS

JUNCTION BOX TOWER DETAILS FOR 48" - 72" PIPE CULVERTS MAXIMUM DEPTH (H) - 20'

VIRGINIA DEPARTMENT OF TRANSPORTATION

SHEET 3 OF 4	REVISION DATE	SPECIFICATION REFERENCE
106.12		105, 233, 302

8

2016 ROAD & BRIDGE STANDARDS

City of Roanoke
Planning, Building, & Development

COMPREHENSIVE DEVELOPMENT PLAN

APPROVED

by Adrian Gilbert 06/13/2018

parker DESIGN GROUP
ENGINEERS • SURVEYORS • PLANNERS • LANDSCAPE ARCHITECTS
2122 Carolina Ave, SW
Roanoke, VA 24014
Ph: 540-387-1153
Fax: 540-389-5767
1915-B W. Cary Street
Richmond, VA 23220
Phone: 804-358-2947
Fax: 804-359-9645
www.parkerdg.com

These documents are the property of Parker Design Group(PDG) and may not be reproduced or used without the express permission of PDG. Any reuse of these documents without authorization of PDG will be at the sole risk of the individual or entity utilizing said documents.

COMMONWEALTH OF VIRGINIA
SIMON L. RUTROUGH
Lic. No. 050774
05/16/2018
PROFESSIONAL ENGINEER

Member One Federal Credit Union Site Development Plan

City of Roanoke, VA
2926 Franklin RD, SW

REVISIONS:
1st Submission City Comments. 4-23-18.
2nd Submission City Comments. 5-16-18.

DESIGNED BY: JMD
DRAWN BY: JMD
CHECKED BY: SLR

DATE: March 14, 2018

SHEET TITLE: STORM DETAILS

SCALE: N/A

SHEET NO. C08

JOB NO. 17-0187:02

Path: S:\2017 Projects\17-0187 Member One - Franklin Road\6 DWG\Civil Engineering Production\17-0187 Cover-Notes-Details.dwg