1. WATERTIGHT MANHOLE FRAME MODEL #1045Z BY EAST JORDAN IRON WORKS, INC. OR EQUIVALENT.
2. HDPE ADJUSTMENT RINGS SHALL MEET H-20 LOAD RATING, AND SHALL BE INTERLOCKING OR UTILIZE BUTYL MASTIC JOINT SEALANT BETWEEN EACH RING TO FORM A WATERTIGHT JOINT.
3. CONCRETE ADJUSTMENT RINGS SHALL MEET H-20 LOAD RATING AND UTILIZE BUTYL MASTIC JOINT SEALANT BETWEEN EACH RING AND FRAME AN COVER TO FORM A WATERTIGHT JOINT.
4. FRAME HEIGHT SHALL BE 7" FOR BURIED LOCATIONS AND 4" FOR EXPOSED LOCATIONS.

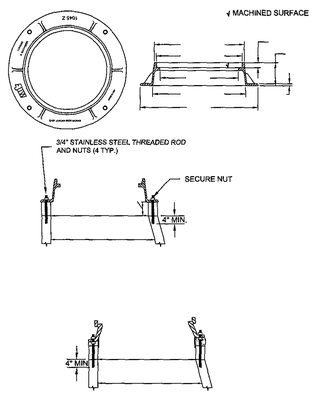

WESTERN VIRGINIA REGIONAL - CONSTRUCTION DETAIL

1 | WATERTIGHT MANHOLE FRAME | S-4
C-503 | NO SCALE | 01/01/14

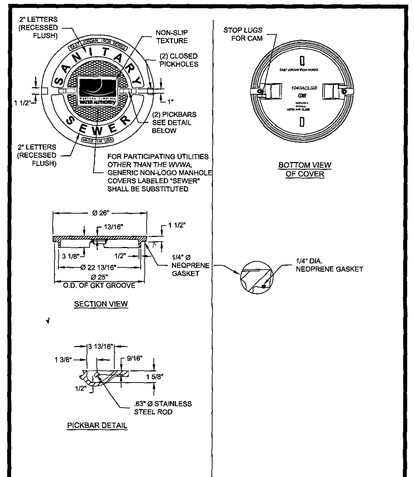

WESTERN VIRGINIA REGIONAL - CONSTRUCTION DETAIL

2 | WATERTIGHT MANHOLE COVER | S-5
C-503 | NO SCALE | 01/01/14

1. FILTER FABRIC TO BE INSTALLED BETWEEN BOTTOM OF PIPE AND STONE BEDDING. FABRIC TO EXTEND VERTICALLY A MINIMUM OF 6" FROM BOTTOM OF VAULT (FULL CIRCUMFERENCE).

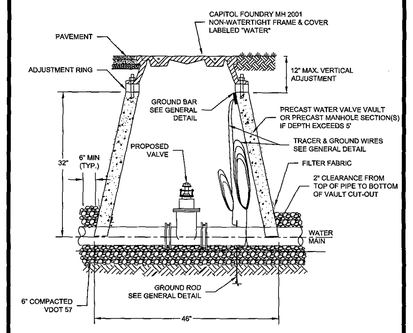

WESTERN VIRGINIA REGIONAL - CONSTRUCTION DETAIL

3 | WATER LINE VALVE & VAULT | W-9
C-503 | NO SCALE | 01/01/14

1. USE MODERATELY STIFF MIX OF NON SHRINK GROUT, SAND, AND 1/2" AND LESS DIAMETER GRAVEL WITH 28 DAYS, STRENGTH AT MINIMUM 3,000 P.S.I.
2. MIX IS TO BE FORCED INTO ALL GROOVES AND UNDER FLANGE OF FRAME AND LEFT AT OR ABOVE TOP OF FLANGE.
3. DO NOT BACKFILL AROUND FRAME AND COVER, FOR 48 HOURS AFTER CONCRETE IS PLACED. THE USE OF HIGH EARLY STRENGTH CEMENT WOULD REDUCE TIME TO 24 HRS.)
4. RESTRICT TRAFFIC LOAD FOR A MINIMUM OF 24 HOURS.

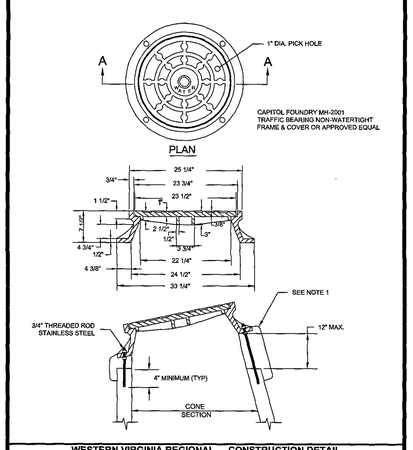

WESTERN VIRGINIA REGIONAL - CONSTRUCTION DETAIL

4 | VAULT FRAME AND COVER | W-16
C-503 | NO SCALE | 01/01/14

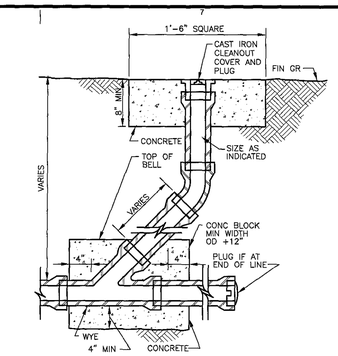

5 | CLEANOUT
C-503 | NO SCALE

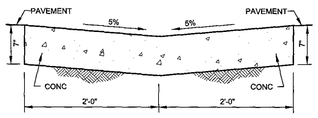

6 | CONCRETE VALLEY GUTTER
C-503 | NO SCALE

Fire Lane Signs

1. Specifications for fire lane signs are as follows:

A. Fire lane signs shall be installed as follows:

- A sign shall be positioned at the beginning and end of the fire lane and at 100 foot intervals throughout the fire lane or as designated by the fire official.
- Signs shall be mounted on posts and must not exceed a setback of 6 feet from the curb or edge of the roadway.
- The sign shall be positioned where clearly visible to traffic.
- The sign is to be mounted not less than 7 feet from the ground to the bottom of the sign, unless otherwise directed.
- Signs shall not be obscured from view by bushes, shrubs, etc.
- Signs shall be installed on the side of direction of travel and shall face the traffic they are intended to serve.

B. Sign Lettering and Construction

- Preferred lettering on sign: **NO PARKING FIRE LANE TOWING ENFORCED** arrows to point to and indicate the area designated as fire lane. (see example sheet) Acceptable lettering on sign: **FIRE LANE NO PARKING.**
- Red letters on white background with 3/8" red stripe around the entire outer edge of the sign.
- Lettering size as follows:

No Parking --- Fire Lane - 2"
Towing Enforced - 1"
Arrow - 1"

- Metal construction, approximately 12" x 18".
- All signs shall be made of reflectorized sheeting and conform to the Manual on Uniform Traffic Control Devices published by the Federal Highway Administration.

7 | FIRE LANE SIGNAGE
C-503 | NO SCALE

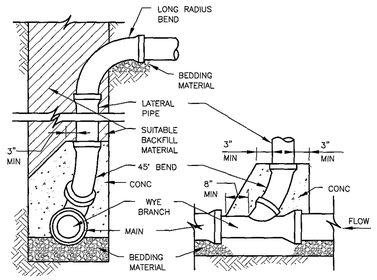

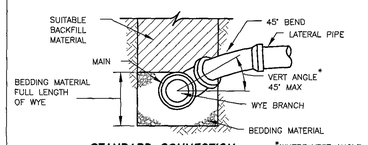

STANDARD CONNECTION VERTICAL ANGLE 45° MAX.

*WHERE VERT ANGLE EXCEEDS 45°, CONN SHALL BE CONC ENCASED.

8 | GRAVITY WYE CONNECTION
C-503 | NO SCALE

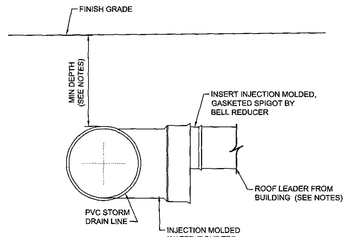

NOTES:
1. SEE PLUMBING AND ARCHITECTURAL SHEETS FOR ROOF LEADER LOCATIONS.
2. SEE PLUMBING FOR ROOF LEADER SIZE AND CONTINUATION.
3. MINIMUM DEPTH OF COVER
   TRAFFIC AREAS: 36 INCHES
   NON-TRAFFIC, YARD AREAS: 24 INCHES

9 | ROOF LEADER CONNECTION
C-503 | NO SCALE

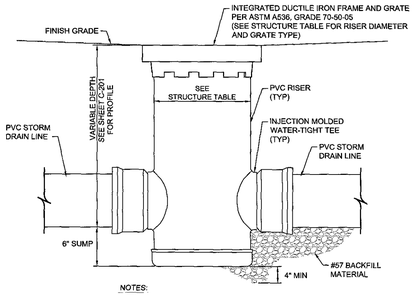

NOTES:
1. BACKFILL MATERIAL SHALL BE CRUSHED STONE MEETING THE REQUIREMENTS OF CLASS II MATERIAL AS DEFINED BY ASTM D2321 OR VDOT #57.
2. BEDDING AND BACKFILL SHALL BE PLACED AND COMPACTED UNIFORMLY IN ACCORDANCE WITH ASTM D2321.
3. DRAINAGE CONNECTION STUB JOINT TIGHTNESS SHALL CONFORM TO ASTM D3212.
4. BASIS OF DESIGN: NYLOPLAST (MANUFACTURED BY ADS) OR ACCEPTABLE EQUIVALENT.

10 | PVC DRAIN BASIN
C-503 | NO SCALE

AECOM

PROJECT

VIRGINIA TECH CARILION (VTC) BIOMEDICAL RESEARCH EXPANSION

VIRGINIA TECH
4 RIVERSIDE CIRCLE
ROANOKE, VA 24016

CLIENT

CARILION CLINIC
213 MCCLANAHAN ST. S.W.,
THIRD FLOOR
ROANOKE, VA 24014
PHONE: 540-981-7024

VIRGINIA TECH.

Virginia-Maryland College of Veterinary Medicine

CONSULTANT

AECOM
10 South Jefferson Street, Suite 1600
Roanoke, Virginia 24011
540.857.3100 tel 540.857.3180 fax
www.aecom.com

SLAM
www.slamcoll.com

Wagner Architecture, pllc

HILL STUDIO

REGISTRATION

COMMONWEALTH OF VIRGINIA
ANDREW C. FREELAND
Lic. No. 43081
03/08/18
PROFESSIONAL ENGINEER

ISSUE/REVISION

I/R	DATE	DESCRIPTION
3	03/08/2018	CITY CP SUBMISSION
2	01/19/2018	CITY CP SUBMISSION
1	12/04/2017	FOR PRESUBMISSION MEETING
0	12/01/2017	FOUNDATION SUBMISSION

KEY PLAN

PROJECT NUMBER

60544603

SHEET TITLE

CIVIL DETAILS

SHEET NUMBER

C-503

This drawing has been prepared for the use of AECOM's client. It may not be used, modified, reproduced or relied upon by third parties, except as agreed by AECOM or as required by law. AECOM accepts no responsibility, and denies any liability whatsoever, to any party that uses or relies on this drawing without AECOM's express written consent. Do not scale this document. All measurements must be obtained from the stated dimensions.

©2016 AECOM Corporation

ARCH E 36" x 48"
Approved:
Checked:
Designer:
Project Management Initials:
M:\CIS\PROJECTS\ENVIRONMENTAL\60544603\900-CAD\C-SHEETS\01 CIVIL\02_UTIL FDN PHASE_NSITE-WS.DWG — 03/08/2018 12:22:17 FREELAND, ANDY
RF: IRM NAC