ALIGNMENT "A" RAW WATER LINE SHEET C-201

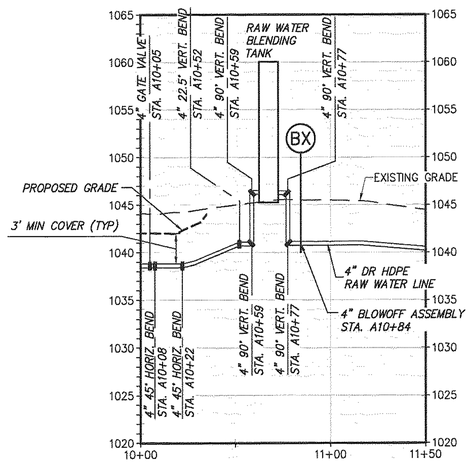

PROFILE
SCALES:
H: 1" = 40'
V: 1" = 8'

ALIGNMENT "B" FINISHED WATER SHEET C-201

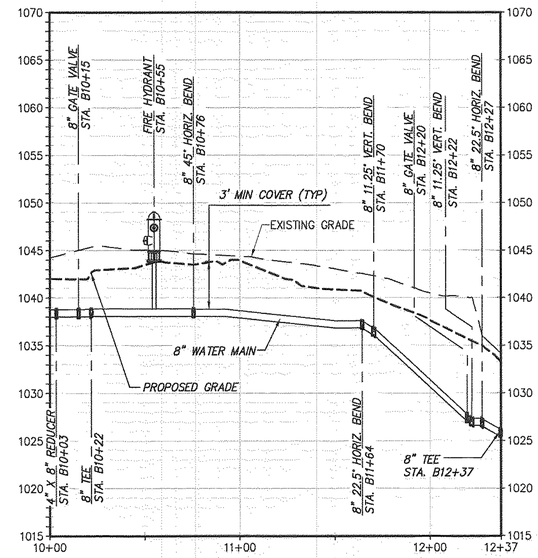

PROFILE
SCALES:
H: 1" = 40'
V: 1" = 8'

ALIGNMENT "D" JACK AND BORE ACROSS ROUTE 40 SHEET C-301

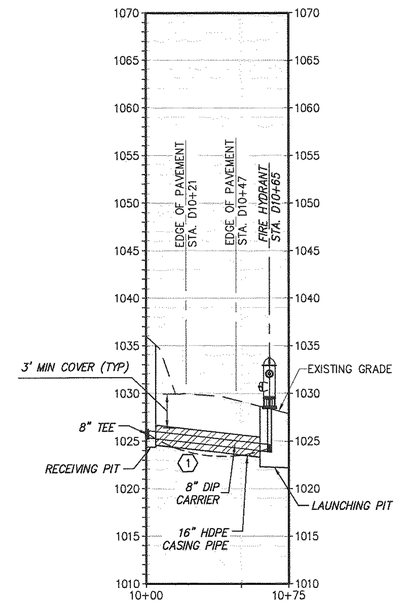

PROFILE
SCALES:
H: 1" = 40'
V: 1" = 8'

SHEET NOTES:

1. PROFILE TO BE ADJUSTED AS SHOWN BY DASHED LINE IF HDD IS UTILIZED FOR CONSTRUCTION METHOD OF WATER MAIN CROSSING ROUTE 40.

BACKWASH LINE SHEET C-201

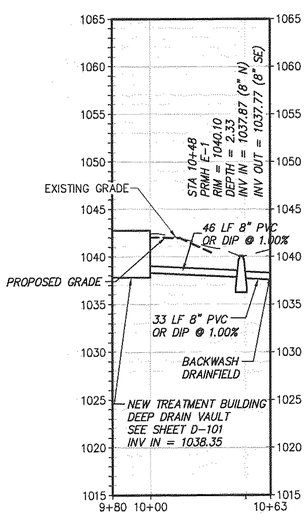

PROFILE
SCALES:
H: 1" = 40'
V: 1" = 8'

SEPTIC SANITARY SEWER SHEET C-201

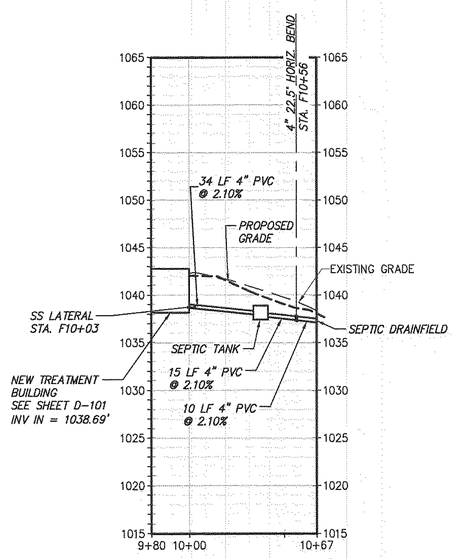

PROFILE
SCALES:
H: 1" = 40'
V: 1" = 8'

STORMWATER CULVERT SHEET C-201

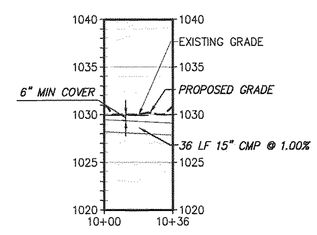

PROFILE
SCALES:
H: 1" = 40'
V: 1" = 8'

PEDESPHERE DRAIN PIPE SHEET C-201

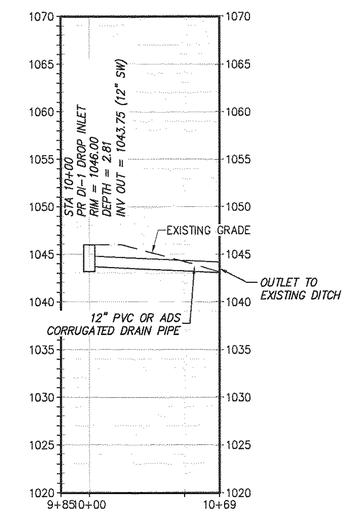

PROFILE
SCALES:
H: 1" = 40'
V: 1" = 8'

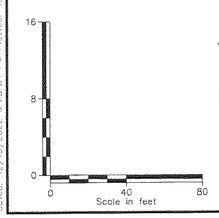

File: V:\PROJECTS\AN-V\W6\073612.000\09_DESIGN\DRAWINGS\01_SHEETS\PHASE 2 - PROCESS\73612_C-309.DWG
Saved: 12/15/2022 3:05:34 PM Plotted: 12/16/2022 10:07:04 AM Current User: Roby, Cynthia LastSavedBy: 7492

Drawing Copyright © 2022

CHA
1341 Research Center Drive, Suite 2100
Blacksburg, VA 24060-5548
540.552.5548 : www.chacompanies.com

WESTERN VIRGINIA WATER AUTHORITY

WESTERN VIRGINIA WATER AUTHORITY

COMMONWEALTH OF VIRGINIA
ERIC T. ANDERSON
Lic. No. 040813
12/16/2022
PROFESSIONAL ENGINEER

IT IS A VIOLATION OF LAW FOR ANY PERSON, UNLESS THEY ARE ACTING UNDER THE DIRECTION OF A LICENSED PROFESSIONAL ENGINEER, ARCHITECT, LANDSCAPE ARCHITECT OR LAND SURVEYOR TO ALTER AN ITEM IN ANY WAY. IF ITEMS BEARING THE SEAL OF A LICENSED PROFESSIONAL ENGINEER, ARCHITECT, LANDSCAPE ARCHITECT OR LAND SURVEYOR SHALL STAMP THE DOCUMENT AND INCLUDE THE NOTATION "ALTERED BY" FOLLOWED BY THEIR SIGNATURE, THE DATE OF SUCH ALTERATION, AND A SPECIFIC DESCRIPTION OF THE ALTERATION.

SOUTHLAKE WATER SYSTEM

CONTRACT 1: WATER TREATMENT PLANT

CONTRACT 2: WATER MAIN

No.	Submittal / Revision	App'd.	By	Date
0	BID ISSUE	ETA	CDR	12/15/22

SITE UTILITY PROFILES

Designed By:	Drawn By:	Checked By:
CDR	AW	ETA
Issue Date:	Project No:	Scale:
12/15/22	073612	AS NOTED

Drawing No.:
C-202