Calculite® Compact Fluorescent Lensed Downlight **8098**

Page 1 of 2 — 8 3/4" Aperture (2) 26/32/42W Triple Tube Vandal / Wet Location

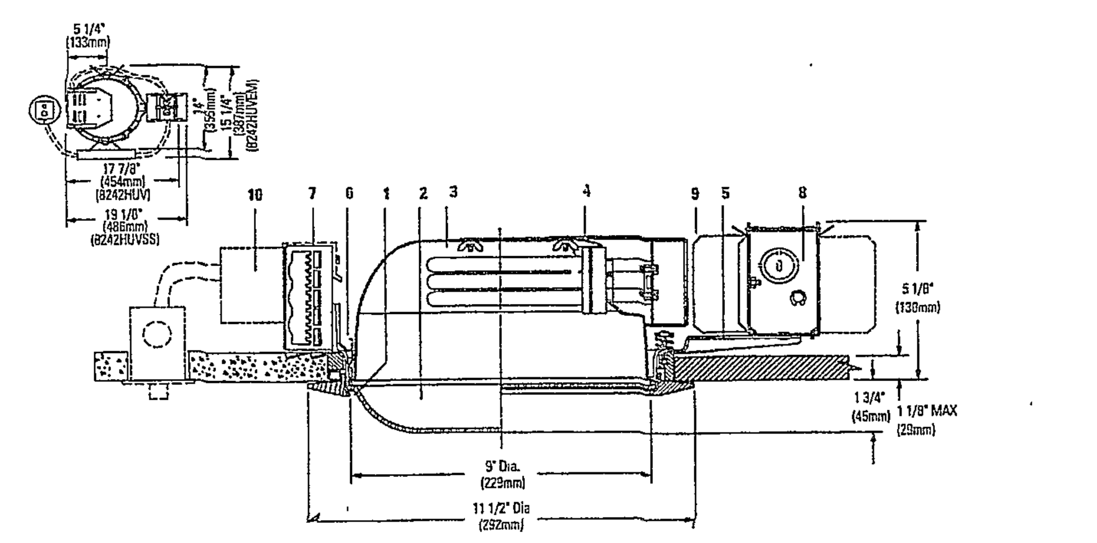

Ceiling Cutout: 10 1/4" (257 mm) Dia.

Reflector Trim		Frame-In Kit		Lamp
8098VWH	Flush Lens / White Flange	8242HUV	120/277V Universal	(2) 26/32/42W Triple Tube 4-Pin
8098DVWH	Drop Open Lens / White Flange	8242HCUV3	120/277V Universal Dimming	
		8242HUVSS	120/277V Universal Separate Switch	
		8242HUVEM	120/277V Universal Emergency	

Features

1. **Rotolock Ring:** Die-cast aluminum; matte white finish. Sealed o-ring construction provides the wet location seal. Single allen-head set screw locks the ring in place to prevent vandalism
2. **Lens:** High impact acrylic, semi-transparent diffuser. Available in Flush lens (8098VWH) and Drop Lens (8098DVWH).
3. **Reflector:** 16 Ga. Die-formed aluminum, clear anodized finish
4. **Socket Bracket:** Die-formed steel. Attaches to reflector without tools, *assures proper* optical alignment of lamps.
5. **Mounting Frame:** Die-cast aluminum suitable for dry or plaster ceilings.
6. **Retaining Springs:** Rust resistant springs simplify reflector/housing removal for inspection and maintenance.
7. **Mounting Brackets:** 16 ga. steel. Adjustable from inside of fixture. Use 3/4" or 1 1/2" lathing channel, 1/2" EMT, or optional 27" mounting bars (see separate specification sheet "MBA").
8. **Junction Box:** 14 ga. steel, 4" (102 mm) x 3 1/2" (89 mm) x 2" (51 mm) box, allows inspection from below. UL certified for through branch circuit wiring with maximum of 8 no. 12, 90° C conductors.
9. **Electronic Ballast:** High Power Factor, thermally protected class "P", no visible flicker on starting, internally fused and protection circuit for lamp end-of-life. Sound rated "A". Designed for removal without tools from inside of fixture. Separate Switching Frame-in Kit is equipped with two separate ballasts.
10. **Emergency Battery Pack Frame-In Kit:** Electronic, fully encased and prewired nickel cadmium long life battery replaceable from below. Test switch and charge light included in easy to install recessed switch box with 4 1/2" dia. matte white cover plate; switch box and charge light can be installed up to 50 feet from fixture. One lamp is illuminated at initial lumens of 450 (26W), 575 (32W) and 750 (42W) light output for 90 minutes when power fails.

Options and Accessories

Mounting Bars: See specification sheet "MBA"
T-Bar Anchor Clips: See specification sheet "MBA"
Fuse (Slow Blow): Add suffix "F"
Emergency Ltg. Kit: FAEM3E, FAEM4E (see "FAEM" specification sheet)

Electrical

For ballast electrical data, latest lamp / ballast compatibility, refer to "Ballast" specification sheet.

Labels

UL listed for Wet Locations
I.B.E.W. Union Made

Job Information	Type: 5
Job Name:	314 MARKET ST - VACO BLDG
Cat. No.:	8098VWH-8242HUV
Lamp(s):	(2) 26W TRIPLE TUBE
Notes:	EXT. FIXTURE UNDER ENTRY CANOPY

Lightolier a Genlyte company www.lightolier.com
631 Airport Road, Fall River, MA 02720 • (508) 679-8131 • Fax (508) 674-4710
We reserve the right to change details of design, materials and finish
© 2006 Genlyte Group LLC • C0406

LIGHTOLIER®

Calculite® Compact Fluorescent Lensed Downlight **8098**

Page 2 of 2 — 8 3/4" Aperture (2) 26/32/42W Triple Tube Vandal / Wet Location

Flush Lens 2-32W Triple Tube
Quick Calculator

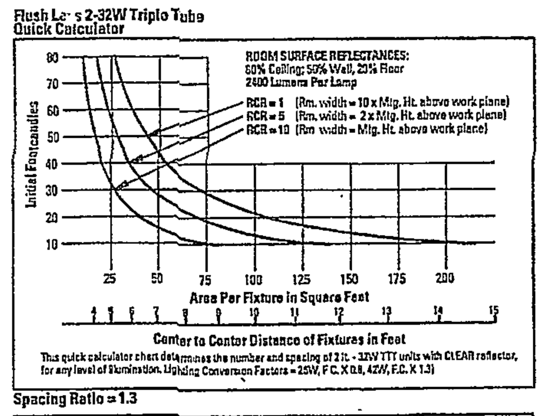

This quick calculator chart determines the number and spacing of 2 lt. - 32W TTT units with CLEAR reflector, for any level of illumination. Lighting Conversion Factors = 26W, F.C. X 0.8, 42W, F.C. X 1.3)

Spacing Ratio = 1.3

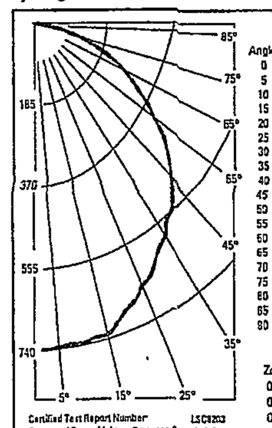

CANDLEPOWER SUMMARY

Angle	Along	22.5	45	67.5	Across	Lumens
0	728	735	736	733	735	
5	734	740	743	739	732	71
10	731	433	727	724	731	
15	716	413	716	715	727	202
20	687	694	687	691	690	
25	661	666	665	658	650	305
30	625	629	637	629	622	
35	589	594	590	597	590	367
40	544	544	539	537	552	
45	496	469	489	488	492	378
50	443	434	440	437	439	
55	381	384	374	371	371	338
60	321	319	312	320	310	
65	254	264	249	248	253	250
70	185	198	191	192	189	
75	128	129	128	117	125	133
80	68	55	54	59	63	
85	9	17	19	12	20	21
90	0	0	0	0	0	

ZONAL LUMENS AND PERCENTAGES

Zone	Lumens	% Lamp	% Luminaire
0-30	577	12.04	27.97
0-40	945	19.70	45.78
0-60	1662	34.63	80.44
0-90	2066	43.04	100.00
40-90	1120	23.35	54.24
60-90	404	8.42	19.56
90-180	0	0.00	0.00
0-180	2066	43.04	100.00

Certified Test Report Number: LSC8203
Computed By: Lighting Sciences Canada ltd.
Prepared For Lightolier CFI
Aperture: 8 3/4" Dia.
Reflector: Specular Clear Alzak
Lamps: 2 x 32W TTT Rated at 2400 Lumens
Efficiency: 43.0%

Coefficients Of Utilization

Ceiling Cavity Reflectance	80			70			50			30			10			0
Wall Reflectance	50	30	10	50	30	10	50	30	10	50	30	10	50	30	10	0
Room Cavity Ratio 1	.45	.44	.42	.45	.43	.42	.43	.41	.40	.41	.40	.39	.39	.39	.38	.37
2	.40	.38	.35	.39	.37	.35	.38	.38	.34	.37	.35	.33	.35	.34	.33	.32
3	.36	.32	.30	.35	.32	.30	.34	.31	.29	.33	.30	.29	.32	.30	.28	.27
4	.32	.28	.26	.31	.28	.26	.30	.27	.25	.29	.27	.25	.28	.26	.25	.24
5	.29	.25	.22	.28	.25	.22	.27	.24	.22	.26	.24	.22	.26	.23	.21	.21
6	.26	.22	.19	.25	.22	.19	.24	.21	.19	.24	.21	.19	.23	.21	.19	.18
7	.23	.19	.17	.23	.19	.17	.22	.19	.17	.21	.18	.16	.21	.18	.16	.15
8	.21	.17	.15	.20	.17	.15	.20	.17	.15	.19	.17	.14	.19	.16	.14	.14
9	.19	.15	.13	.19	.15	.13	.18	.15	.13	.18	.15	.13	.17	.15	.13	.12
10	.17	.14	.12	.17	.14	.11	.17	.14	.11	.16	.13	.11	.16	.13	.11	.11

For 26W and 42W lamps, multiply C.U.'s X 1.0.

Job Information	Type: 5

Lightolier a Genlyte company www.lightolier.com
631 Airport Road, Fall River, MA 02720 • (508) 679-8131 • Fax (508) 674-4710
We reserve the right to change details of design, materials and finish.
© 2006 Genlyte Group LLC • C0406

LIGHTOLIER®

GENERAL NOTES

ALL DIMENSIONS ARE TO FACE OF CURB, FACE OF BUILDING OR EDGE OF PAVEMENT UNLESS OTHERWISE NOTED.

SUBGRADE UNDER NEW BUILDING SHALL BE COMPACTED TO A MINIMUM OF 95% OF STANDARD PROCTOR (ASTM D698).

ROOF DRAINS SHALL CONNECT TO ROOF LEADERS WITH FABRICATED WYES OR TEES. ROOF DRAINS SHALL DISCHARGE INTO TRENCH DRAINS WITH CAST IRON LOAD BEARING GRATES AND INTO THE EXISTING GUTTER.

NO STORMWATER MANAGEMENT REQUIRED AS THE PROPERTY IS CURRENTLY AND WILL REMAIN COMPLETELY IMPERVIOUS.

EROSION CONTROL MEASURES ARE NOT NECESSARY AS THERE WILL BE NO RUNOFF FROM THE PROPERTY DURING CONSTRUCTION DUE TO THE FACT THAT THE SITE WILL BE EXCAVATED A MINIMUM OF 18" BELOW EXISTING GRADES TO FACILITATE THE BUILDING FOUNDATION CONSTRUCTION.

CONSTRUCTION DEBRIS SHALL BE CONTAINERIZED IN ACCORDANCE WITH THE VIRGINIA LITTER CONTROL ACT. NO LESS THAN ONE LITTER RECEPTACLE SHALL BE PROVIDED ON SITE.

COORDINATE SERVICE CONNECTION TAPS WITH WESTERN VIRGINIA WATER AUTHORITY AND CITY OF ROANOKE TRAFFIC ENGINEERING DEPARTMENT. GENERAL CONTRACTOR SHALL DEVELOP A TRAFFIC MAINTENANCE SCHEDULE TO FACILITATE WORK ON/IN THE STREET RIGHT OF WAY.

SEE SHEET C2.1 FOR TRAFFIC CONTROL DETAIL AND TYPICAL UTILITY DETAILS.

IF THE BUILDING INCLUDES A FIRE ALARM SYSTEM THEN A KNOXBOX SHALL BE REQUIRED COORDINATE WITH ARCHITECTURAL PLANS.

PHOTOMETRIC PLAN

AN AS-BUILT PHOTOMETRIC PLAN IS REQUIRED TO BE SUBMITTED TO THE ROANOKE CITY PLANNING DEPARTMENT AT THE COMPLETION OF THE PROJECT.

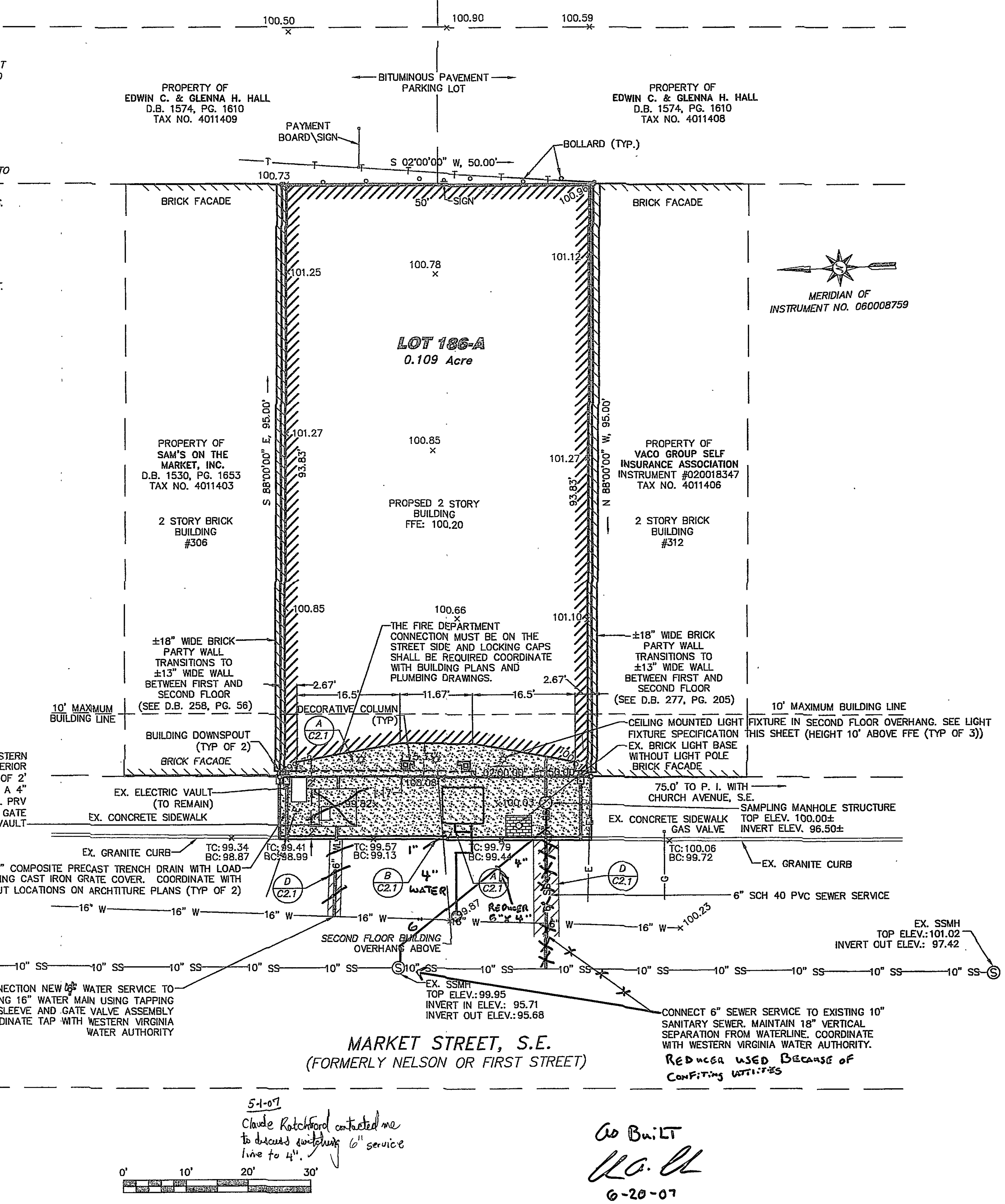

5-1-07
Claude Ratchford contacted me to discuss switching 6" service line to 4".

As Built
[signature]
6-20-07

COMMONWEALTH OF VIRGINIA
SCOTT F. EASTER
No. 031618
01/24/2007
PROFESSIONAL ENGINEER

ACS DESIGN
ENGINEERING • SURVEYING
LANDSCAPE ARCHITECTURE
CONSTRUCTION MANAGEMENT

2203 PETERS CREEK ROAD
ROANOKE, VIRGINIA 24017
P 540.562.2345 F 562.2344
INFO@ACSDESIGNLLC.COM
WWW.ACSDESIGNLLC.COM

308 Market Street
VACO Office Building Infill
Roanoke, Virginia

DRAWN BY:	SFE
DESIGNED BY:	DME
CHECKED BY:	DME
DATE:	08 DEC 2006
JOB NUMBER:	06267

REVISIONS:

No. 1 Per Roanoke City Comments	03 JAN 2007
No. 2 Per Roanoke City Comments	24 JAN 2001
No. 3	
No. 4	

SHEET NO.:
C1.2

Dimensional, Grading & Utility Plan