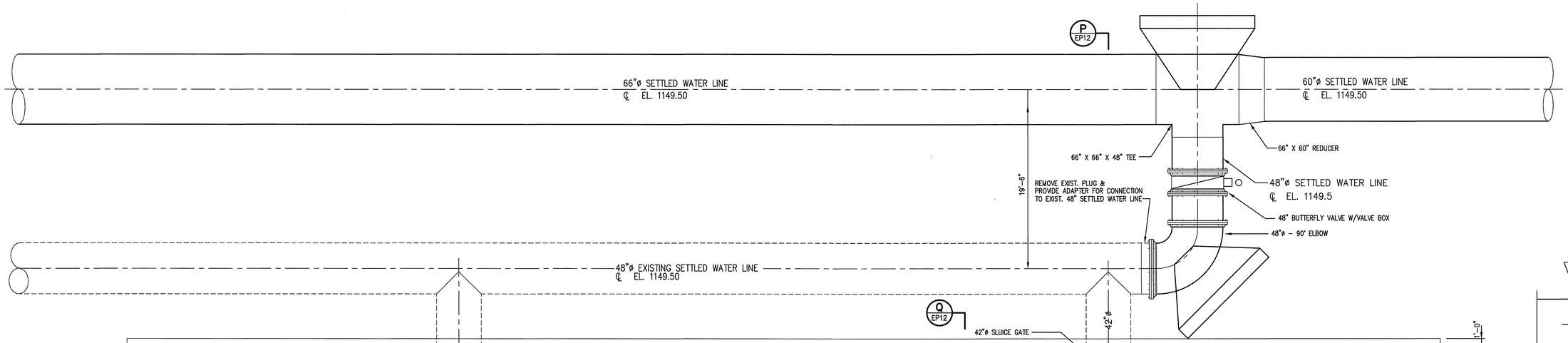

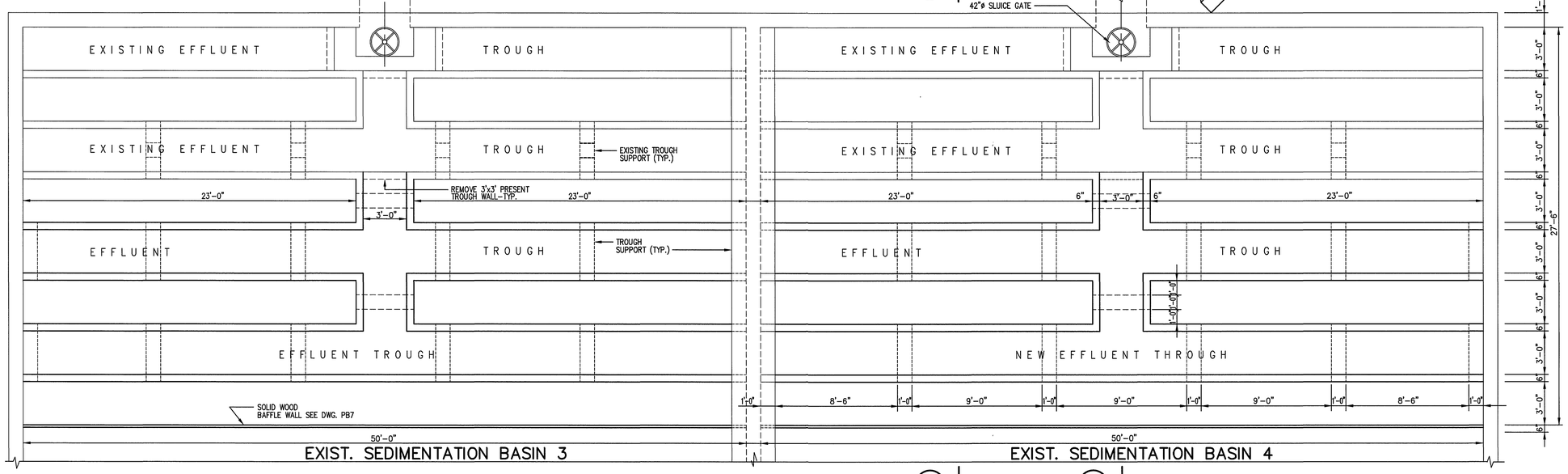

PLAN – 1954 SETTLING BASINS
SCALE: 1/4" = 1'-0"

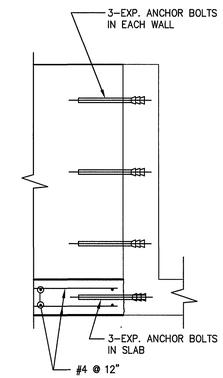

DETAIL "A"
SCALE: 1"=1'-0"

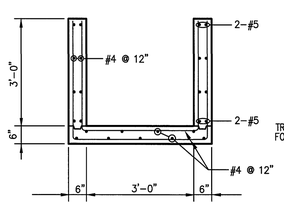

TROUGH DETAIL
SCALE: 1/2"=1'-0"

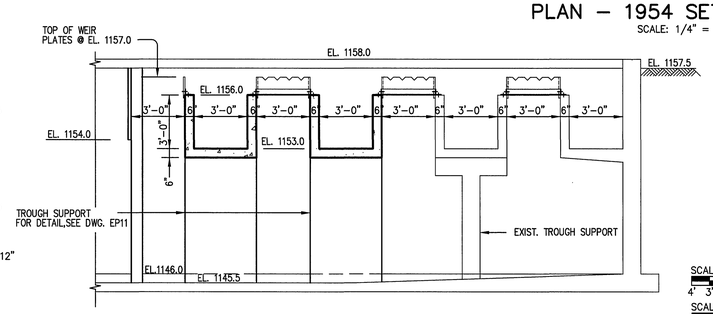

SECTION Q EP12
SCALE: 1/4"= 1'-0"

SCALE OF DRAWING 1/4" = 1'-0"
4' 3' 2' 1' 0 4' 8'
SCALE OF DRAWING 1/2" = 1'-0"
2' 1' 0 2' 4'
SCALE OF DRAWING 1" = 1'-0"
1' 0 2'

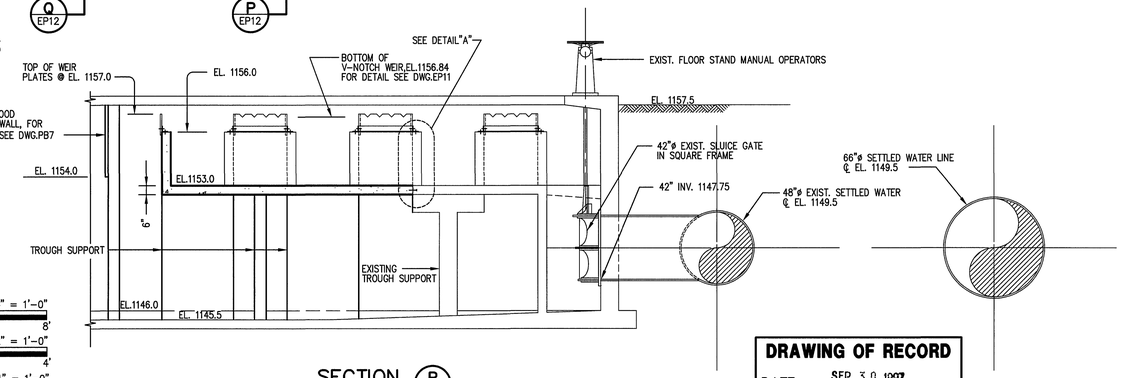

SECTION P EP12
SCALE: 1/4"= 1'-0"

DRAWING OF RECORD
DATE: SEP 30 1997

MATTERN & CRAIG CONSULTING ENGINEERS • SURVEYORS ROANOKE VIRGINIA	DESIGNED: K.C., F.L.		COMMONWEALTH OF VIRGINIA YA-TAI LIN NO. 022786 PROFESSIONAL ENGINEER	REV.	DATE	DESCRIPTION	BY	APP.
ALVORD, BURDICK & HOWSON ENGINEERS CHICAGO	DRAWN: H.F. R.T.							
	CHECKED: Y.T.L.							

CARVINS COVE FILTER PLANT IMPROVEMENTS – PHASE I
ROANOKE, VIRGINIA

1954 SEDIMENTATION BASIN IMPROVEMENTS

DATE APRIL 1992
COMM. NO. 9130
SHEET EP12

PLAN NO. 6199